BOMAG
FAYAT GROUP

TECHNICAL DATA

STABILIZERS/ RECYCLERS

RS 460



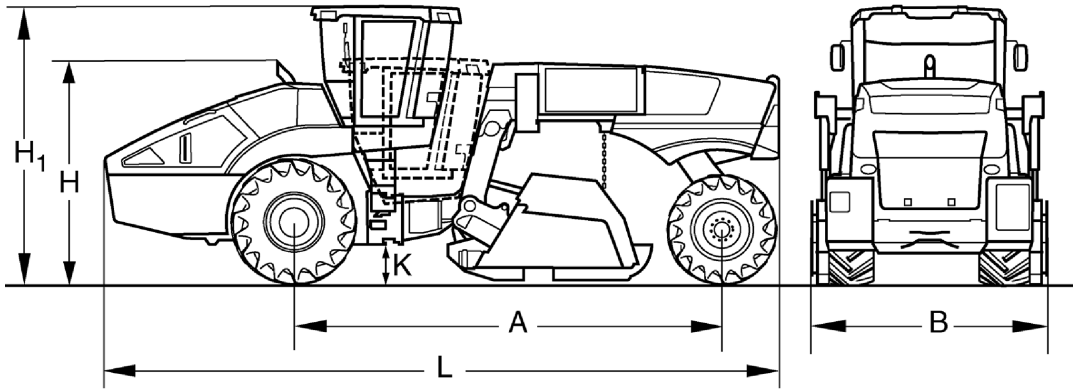

Dimensions in mm

	A	B	H	H1	K	L
RS 460	6073	2872	3100	3885	510	9579

Shipping dimensions in m3

RS 460	85,284

I. Soil stabilisation with cement and lime in sand and gravel				
Layer thickness	cm	20	30	50
Output	m² / day	14.000-17.000	9.000-14.500	6.500-10.000

II. Improvment with lime in mixed soils				
Layer thickness	cm	20	30	50
Output	m² / day	15.000-20.000	10.000-15.000	9.000-13.000

III. Pulverization of silt and clay				
Layer thickness	cm	20	30	50
Output	m² / day	7.000-11.000	6.000-9.000	4.500-8.000

IV. Mix in place recycling of asphalt roads **Normal total cutting depth 35 cm**				
Asphalt thickness	cm	5	10	15
Output	m² / day	7.000-9.000	5.500-7.580	3.000-5.000

Production rates can vary depending on materials and application type.

Technical Data		BOMAG RS 460
Weights		
Operating weigh	kg	24.200
Axle load, front	kg	16.050
Axle load, rear	kg	8.150
Max. weight	kg	27.250
Driving Characteristics		
Speed (1)	km/h	0- 3,0
Speed (2)	km/h	0- 12,0
Max. gradeability (dep. on soil con.)	%	40
Drive		
Engine manufacturer		Merc.-Benz
Engine type		OM 471 LA
Emission stage		Stage V / TIER4f
Exhaust gas aftertreatment		DOC+DPF+SCR
Cooling		Liquid
Number of cylinders		6
Performance ISO 9249	kW	340,0
Performance SAE J 1995	hp	456,0
Speed	min-1	1.600
Electric equipment	V	24
Drive system		hydrost.
Driven wheels		all wheel
Tyres		
Tyre size, front		24.5-32 24PR
Tyre size, rear		23.1-26 20PR
Brakes		
Service brake		hydrost.
Parking brake		multi disc
Steering		
Steering system		Art. + rear
Steering method		hydraulic
Rotor		
Rotor width	mm	2.440
Rotor diameter, outer	mm	1.224
Rotor speed	min-1	104- 179
Rotor oscillation angle +/-	grad	8
Sense of rotation		up-cut
Max. cutting depth	mm	500
Number of cutting teeth		160
Height of cutting teeth	mm	290
Capacities		
Fuel	l	875,0
Water	l	850,0
AdBlue (DEF)®	l	85,0

Technical modifications reserved. Machines may be shown with options.

Standard Equipment

- ☑ Hydrostatic drive / all wheel
- ☑ Anti Slip Control (ASC)
- ☑ Hydr./ mech. rotor drive with autom. power control
- ☑ Hydr. adjustable rotor inclination, automatic
- ☑ Universal rotor with exchange holder BMS15
- ☑ Hydr. tailgate with floating position+Load application function
- ☑ Hydrostatic articulated steering
- ☑ Hydrostatic rear axle steering
- ☑ 4 Steering modes
- ☑ Height adjustable ROPS cab
  - Transport/working position
  - slewable/slidable multi-function work place
  - heating
  - Air condition
  - Radio
- ☑ Working lights (LED)
- ☑ Rotary beacon
- ☑ Camera system Plus
- ☑ 4x Emergency STOP
- ☑ Air compressor + Connecting port for compressed air tools
- ☑ Lockable stowage compartments
- ☑ Rotary unit for rotor forward/reverse
- ☑ Pneumatic hammer for changing cutting tools
- ☑ compressed air system + Compressed air set

Optional Equipment

- ☐ Water metering system (900l + 1600l)
- ☐ Water prefilter
- ☐ Emulsion metering system 900l/min.
- ☐ Emulsion pre-filter for water system
- ☐ Dosing bar for cement suspension
- ☐ Printer for metering computer
- ☐ Quick-change holder 20mm (BMS15)
- ☐ High pressure cleaner
- ☐ Central lubrication system
- ☐ Tool kit
- ☐ Quick refuelling system
- ☐ BOMAG TELEMATIC POWER
- ☐ Special painting
- ☐ Biodegradable hydraulic oil
- ☐ Vibratory plate

BOMAG
Hellerwald
D-56154 Boppard
P.O. Box 5162
Tel. (0)6742 - 1000
Fax (0)6742 - 3090

BOMAG
FAYAT GROUP