BOMAG
FAYAT GROUP

TECHNICAL DATA

TRACTOR-TOWED STABILIZER

RS 300



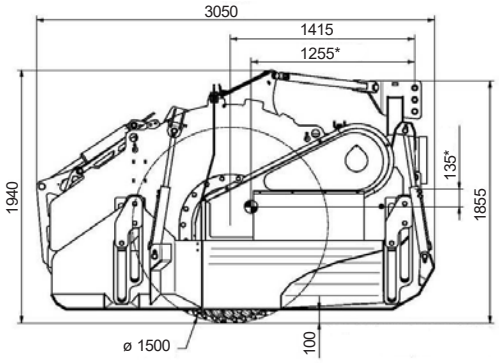

*Center of Gravity

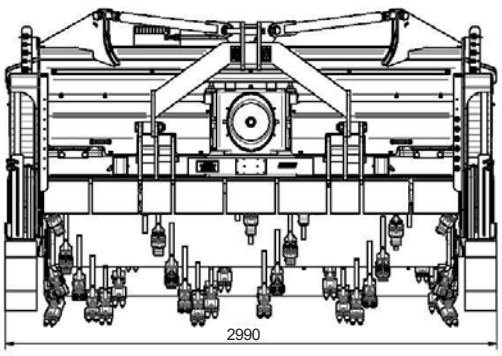

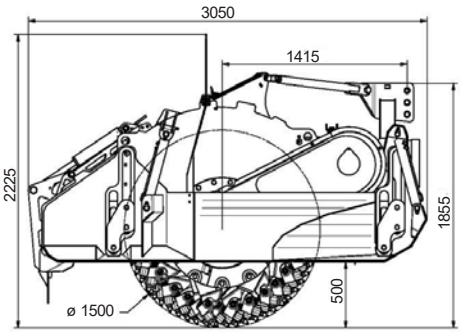

Standard equipment

- ☑ CE conformity
- ☑ Drive shaft 1 3/4" with 20 teeth
- ☑ Hydraulically adjustable rear flap
- ☑ Rotor housing made of highly wear-resistant steel (400 HBW)
- ☑ Hydraulically adjustable side plates on the rotor housing made of highly wear-resistant steel (400 HBW)
- ☑ 16 additional wear plates on the insides of the rotor housing made of highly wear-resistant steel (540 HBW)
- ☑ Universal rotor with 68 inter-changeable double tool holder (25 mm picks)
- ☑ Belt drive, one four-piece belt on the left and right side

Optional equipment

- ☐ Drive shaft 1 3/4" with 6 teeth (instead of the standard with 20 teeth)
- ☐ Special single-colour finish
- ☐ Special dual-colour finish
- ☐ Hydraulic top link Ø32/Ø37 mm (bolt, tractor side)
- ☐ Hydraulic top link Ø 40 mm (bolt, tractor-side)
- ☐ Hydraulic top link Ø 45 mm (bolt, tractor side)
- ☐ Water injection 500 l/min incl. pump (regulation via tractor oil quantity)
- ☐ Flat pick (shovel shape)
- ☐ Initial equipment of 25 mm picks
- ☐ BMS 15 Universal rotor
- ☐ HP Kit 450+
- ☐ Tailgate indicator

Technical data		**RS 300**
Dimensions (LxWxH)	mm	3,050 x 2,990 x 1,940
Working width	mm	2,500
Working depth max.	mm	500
Weight	kg	6,710
Transport dimensions	m^3	17,692
Drive shaft (scope of delivery)		1 3/4” with 20 teeth
Direction of rotor rotation		counter-directional
Rotor/cutting diameter	mm	1,500
Rotor speed (input speed 1000 min -1)	min^{-1}	88
Number of picks		154
Pick height (above rotor)	mm	361
Tractor requirements		
Power requirement min.	kW (PS)	220 (300)
Power requirement max.	kW (PS)	330 (450)
Torque max.	Nm	1980
Rear linkage		Three-point category 3 and 4
Front weight min.	kg	2,500
Drive shaft speed (input speed).	min^1	1,000
Recommended travel system		infinitely variable 0 to V max.

Technical modifications reserved. Machines may be shown with options.
The actual machine weight depends on the respective configuration.

PRE 910 21 010 150426 Sa02

BOMAG
Hellerwald
D-56154 Boppard
P.O. Box 5162
D-56149 Boppard
Phone: +49 (0)6742 1000
Fax +49 (0)6742 3090

BOMAG
FAYAT GROUP