TECHNICAL DATA

TRACTOR-TOWED STABILIZER

RS 250-2



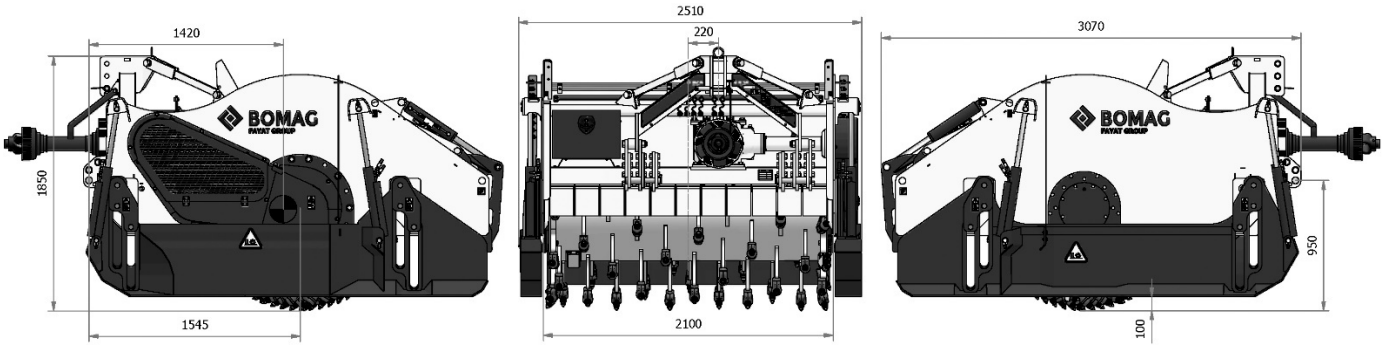

Standard equipment

- ☑ CE conformity
- ☑ Hydraulically adjustable rear flap (400 HBW)
- ☑ Rotor housing made of highly wear-resistant steel (400 HBW)
- ☑ Universal rotor with BMS 15 L exchange holder system (22 mm cutter)
- ☑ One belt on the left
- ☑ Additional wear plates made of Creusabro 8000

Optional equipment

- ☐ Drive shaft 1 3/4" with 6 teeth
- ☐ Drive shaft 1 3/4" with 20 teeth
- ☐ Special single-colour finish
- ☐ Special dual-colour finish
- ☐ Hydraulic top link Ø32/Ø37 mm (bolt, tractor side)
- ☐ Hydraulic top link Ø 40 mm (bolt, tractor side)
- ☐ Hydraulic top link Ø 45 mm (bolt, tractor side)
- ☐ Rear door indicator

Technical data		**RS 250-2**
Dimensions (LxWxH)	mm	3,070 x 2,520 x 1,900
Working width	mm	2,100
Working depth max.	mm	500
Weight	kg	4,990
Transport dimensions	m^3	11,045
Direction of rotor rotation		counter-directional
Rotor/cutting diameter	mm	1500
Rotor speed (input speed 1000 min -1)	min^{-1}	90
Number of cutters		100
Cutter height (above rotor)	mm	361
Tractor requirements		
Power requirement min.	kW (PS)	147 (200)
Power requirement max.	kW (PS)	257 (350)
Torque max.	Nm	1,500
Rear linkage		Three-point category 3 and 4
Front weight min.	kg	1,800 (2,500 recommended)
Drive shaft speed (input speed)	min^1	1,000
Recommended travel system		infinitely variable 0 to V max.

Technical modifications reserved. Machines may be shown with options.
The actual machine weight depends on the respective configuration.

PRE 910 22 010 200825 Sa01

BOMAG
Hellerwald
D-56154 Boppard
P.O. Box 5162
D-56149 Boppard
Phone: +49 (0)6742 1000
Fax +49 (0)6742 3090

BOMAG
FAYAT GROUP