BOMAG
FAYAT GROUP

# TECHNICAL DATA

TANDEM ROLLERS

BW 90 SC-5, BW 100 SC-5



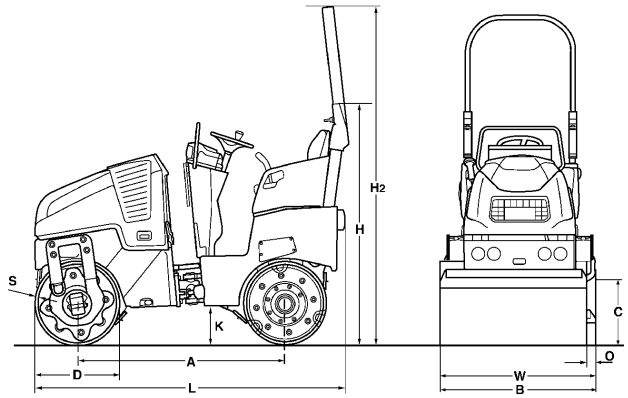


## Dimensions in mm

| | A | B | C | D | H | H2 | K | L | O | S | W |
|---|---|---|---|---|---|---|---|---|---|---|---|
| **BW 90 SC-5** | 1508 | 960 | 435 | 580 | 1627 | 2304 | 255 | 2194 | 52 | 12 | 960 |
| **BW 100 SC-5** | 1508 | 1060 | 435 | 580 | 1627 | 2304 | 255 | 2194 | 52 | 12 | 1060 |

| Shipping dimensions in m3 | without ROPS | with ROPS |
|---|---|---|
| **BW 90 SC-5** | 3,427 | 4,853 |
| **BW 100 SC-5** | 3,784 | 5,358 |

| Machine type | Compaction output (m3/h) at recommended soil layer thicknesses | | |
|---|---|---|---|
| | **Gravel, sand** | **Mixed soil** | **Silt, clay** |
| BW 90 SC-5 | 70-120 | 45-90 | 35-70 |
| BW 100 SC-5 | 75-140 | 50-100 | 36-70 |

| Machine type | Compaction output (t/h) at different asphalt layer thicknesses | | |
|---|---|---|---|
| | **2-4 cm** | **6-8 cm** | **10-14 cm** |
| BW 90 SC-5 | 15-30 | 30-50 | 40-80 |
| BW 100 SC-5 | 15-40 | 35-60 | 50-90 |

| Technical Data | | BOMAG BW 90 SC-5 | BOMAG BW 100 SC-5 |
|---|---|---|---|
| **Weights** | | | |
| Operating weight CECE | kg | 1.650 | 1.700 |
| Average static linear load CECE | kg/cm | 9,2 | 8,5 |
| Grossweight | kg | 1.900 | 1.900 |
| **Dimensions** | | | |
| Working width | mm | 960 | 1.060 |
| Track radius, inner | mm | 2.000 | 1.950 |
| **Driving Characteristics** | | | |
| Speed | km/h | 0- 10,0 | 0- 10,0 |
| Working speed with vibration | km/h | 0- 10,0 | 0- 10,0 |
| Max. gradeability without/with vibr. | % | 40/30 | 40/30 |
| **Drive** | | | |
| Engine manufacturer | | Kubota | Kubota |
| Engine type | | D 902 | D 902 |
| Emission stage | | Stage V / TIER4f | Stage V / TIER4f |
| Cooling | | water | water |
| Number of cylinders | | 3 | 3 |
| Performance ISO 14396 | kW | 15,1 | 15,1 |
| Performance SAE J 1995 | hp | 20,2 | 20,2 |
| Speed | min-1 | 3.000 | 3.000 |
| Speed adjustment 1 | min-1 | 2.100 | 2.100 |
| Speed adjustment 2 | min-1 | 3.000 | 3.000 |
| Electric equipment | V | 12 | 12 |
| Driven drum | | front + rear | front + rear |
| **Brakes** | | | |
| Service brake | | hydrost. | hydrost. |
| Parking brake | | hydromec. | hydromec. |
| **Steering** | | | |
| Steering system | | oscil.artic. | oscil.artic. |
| Steering method | | hydrost. | hydrost. |
| Steering / oscillating angle +/- | grad | 33/8 | 33/8 |
| Crab walk | mm | 0- 50 | 0- 50 |
| **Exciter system** | | | |
| Vibrating drum | | front + rear | front + rear |
| Drive system | | hydrost. | hydrost. |
| Frequency | Hz | 42/63 | 42/63 |
| Amplitude | mm | 0,50 | 0,50 |
| Centrifugal force | kN | 8/19 | 8/19 |
| **Sprinkler System** | | | |
| Type of sprinkling | | pressure | pressure |
| **Capacities** | | | |
| Fuel | l | 30,0 | 30,0 |
| Water | l | 100,0 | 100,0 |

Technical modifications reserved. Machines may be shown with options.

## Standard Equipment

- ☑ Side-clearance roller (drum offset 60-100 mm)
- ☑ Hydrostatic travel and vibration drive
- ☑ Travel drive in series
- ☑ 2 scrapers per drum, spring loaded and tiltable
- ☑ Pressure sprinkler system with interval switch
- ☑ Multi function travel lever
- ☑ Multi-function display incl. operating hour meter
- ☑ Water level
- ☑ Emergency STOP
- ☑ Individual control, vibration
- ☑ Intelligent Vibration Control (IVC)
- ☑ Integrated storage compartment
- ☑ Adjustable operator's seat
- ☑ Seat contact switch
- ☑ Vandalism protection
- ☑ 12V socket
- ☑ Working lights front and rear
- ☑ Back-up alarm
- ☑ Lockable engine hood made of composite material
- ☑ Lashing eyes, galvanized
- ☑ Single point lifting device
- ☑ Battery disconnect switch

## Optional Equipment

- ☐ ROPS with safety belt
- ☐ * Foldable ROPS incl. seat belt
- ☐ Sun roof, foldable with ROPS
- ☐ Double travel lever
- ☐ Seat heating
- ☐ BOMAG TELEMATIC
- ☐ Theft protection
- ☐ Indicator and hazard lights
- ☐ Rotary beacon
- ☐ Optional lighting on ROPS
- ☐ Environmentally compliant hydraulic oil
- ☐ Special painting
- ☐ Edge cutter
- ☐ Port for hydraulik breaker
- ☐ Backup warning buzzer with broadband technology
- ☐ Temperature display
- ☐ ECOSTOP
- ☐ Outside mirrors
- ☐ Anti-frost intake
- ☐ Tablet holder set
- ☐ JOBLINK measuring technology interface
- ☐ JOBLINK Bluetooth adapter
- ☐ BOMAP GPS antenna holder

* Standard delivery with CE conformity (valid within European Union)#72

**BOMAG**
Hellerwald
D-56154 Boppard
P.O. Box 5162
Tel. (0)6742 - 1000
Fax (0)6742 - 3090

BOMAG
FAYAT GROUP