BOMAG
FAYAT GROUP

TECHNICAL DATA

COMBINATION ROLLER

BW 90 AC-5, BW 90 SCC-5



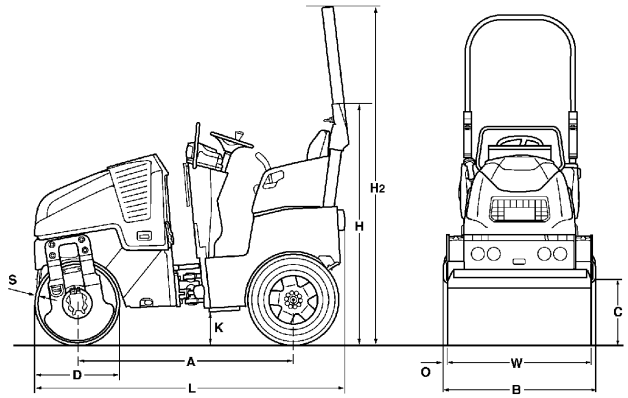

Dimensions in mm

	A	B	C	D	H	H2	K	L	O	S	W
BW 90 AC-5	1508	956	433	580	1627	2304	255	2194	28	12	900
BW 90 SCC-5	1508	956	433	580	1627	2304	255	2194	28	12	900

Shipping dimensions in m3	without ROPS	with ROPS
BW 90 AC-5	3,413	4,833
BW 90 SCC-5	3,413	4,833

Machine type	Compaction output (t/h) at different asphalt layer thicknesses		
	2-4 cm	**6-8 cm**	**10-14 cm**
BW 90 AC-5	10-35	30-45	40-70
BW 90 SCC-5	10-35	30-45	40-70

Technical Data		BOMAG BW 90 AC-5	BOMAG BW 90 SCC-5
Weights			
Operating weight CECE	kg	1.600	1.600
Axle load, drum / wheels CECE	kg	755/845	735/865
Wheel load CECE	kg	211	216
Static linear load, front CECE	kg/cm	8,4	8,2
Grossweight	kg	1.900	1.900
Dimensions			
Working width	mm	900	900
Track radius, inner	mm	2.030	2.030
Driving Characteristics			
Speed	km/h	0- 10,0	0- 10,0
Working speed with vibration	km/h	0- 10,0	0- 10,0
Max. gradeability without/with vibr.	%	40/30	40/30
Drive			
Engine manufacturer		Kubota	Kubota
Engine type		D 902	D 902
Emission stage		Stage V / TIER4f	Stage V / TIER4f
Cooling		water	water
Number of cylinders		3	3
Performance ISO 14396	kW	15,1	15,1
Performance SAE J 1995	hp	20,2	20,2
Speed	min-1	3.000	3.000
Speed adjustment 1	min-1	2.100	2.100
Speed adjustment 2	min-1	3.000	3.000
Electric equipment	V	12	12
Driven drum		front	front
Driven wheels		4	4
Drums and Tyres			
Tyre size		190/60-15	190/60-15
Brakes			
Service brake		hydrost.	hydrost.
Parking brake		hydromec.	hydromec.
Steering			
Steering system		oscil.artic.	oscil.artic.
Steering method		hydrost.	hydrost.
Steering / oscillating angle +/-	grad	33/8	33/8
Crab walk	mm	0- 50	0- 50
Exciter system			
Vibrating drum		front	front
Drive system		hydrost.	hydrost.
Frequency	Hz	42/63	42/63
Amplitude	mm	0,50	0,50
Centrifugal force	kN	8/17	8/17
Sprinkler System			
Type of sprinkling		pressure	Druck
Capacities			
Fuel	l	30,0	30,0
Water	l	100,0	100,0
Emulsion	l	11,0	11,0

Technical modifications reserved. Machines may be shown with options.

Standard Equipment

- ☑ Four smooth rear rubber wheels
- ☑ Hydrostatic travel and vibration drive
- ☑ 2 scrapers per drum, spring loaded and tiltable
- ☑ Pressure sprinkler system with interval switch
- ☑ Multi function travel lever
- ☑ Multi-function display incl. operating hour meter
- ☑ Water level
- ☑ Emergency STOP
- ☑ Intelligent Vibration Control (IVC)
- ☑ Integrated storage compartment
- ☑ Adjustable operator's seat
- ☑ Seat contact switch
- ☑ Vandalism protection
- ☑ 12V socket
- ☑ Working lights front and rear
- ☑ Back-up alarm
- ☑ Lockable engine hood made of composite material
- ☑ Lashing eyes, galvanized
- ☑ Single point lifting device
- ☑ Battery disconnect switch

Optional Equipment

- ☐ ROPS with safety belt
- ☐ * Foldable ROPS incl. seat belt
- ☐ Sun roof, foldable with ROPS
- ☐ Double travel lever
- ☐ Seat heating
- ☐ ECONOMIZER with asphalt temperature display
- ☐ Temperature display
- ☐ BOMAG TELEMATIC
- ☐ Electronic fuel gauge
- ☐ Theft protection
- ☐ Indicator and hazard lights
- ☐ Rotary beacon
- ☐ Optional lighting on ROPS
- ☐ Environmentally compliant hydraulic oil
- ☐ Special painting
- ☐ Edge cutter
- ☐ Port for hydraulik breaker
- ☐ Backup warning buzzer with broadband technology
- ☐ Brake release device
- ☐ ECOSTOP
- ☐ Outside mirrors
- ☐ Anti-frost intake
- ☐ Tablet holder set
- ☐ JOBLINK measuring technology interface
- ☐ JOBLINK Bluetooth adapter
- ☐ BOMAP GPS antenna holder

* Standard delivery with CE conformity (valid within European Union)#72

BOMAG
Hellerwald
D-56154 Boppard
P.O. Box 5162
Tel. (0)6742 - 1000
Fax (0)6742 - 3090

BOMAG
FAYAT GROUP