TECHNICAL DATA

PNEUMATIC TYRED ROLLERS

BW 28 RH



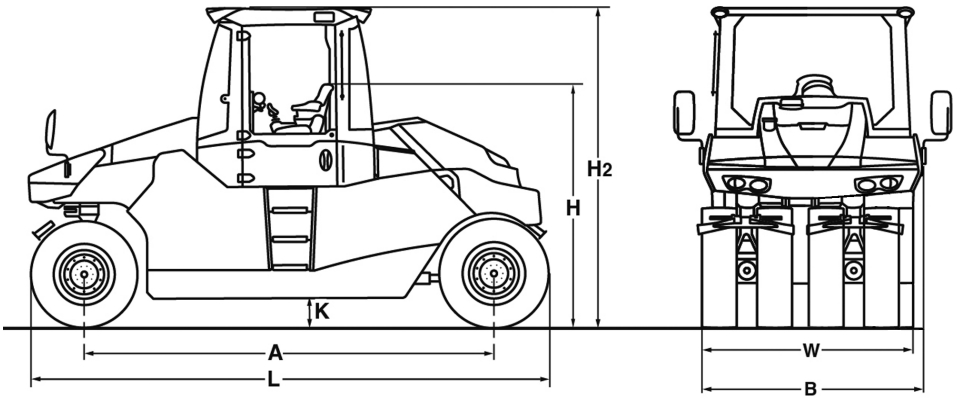

Dimensions in mm

	A	B	H	H2	K	L	W
BW 28 RH	3875	2070	2287	3050	280	4945	2045

Shipping dimensions in m3	without ROPS	with ROPS
BW 28 RH	23,410	31,220

Machine type	Compaction output (m3/h) (layer thickness) at recommended soil layer thicknesses		
	Silt, clay (0,20 m)	**Gravel, sand (0,30 m)**	**Mixed soil (0,25 m)**
BW 28 RH	120-150	120-200	80-180

Machine type	Compaction output (t/h) at different asphalt layer thicknesses		
	2-4 cm	**6-8 cm**	**10-12 cm**
BW 28 RH	30-80	60-100	80-150

Technical Data		BOMAG BW 28 RH
Weights		
Operating weight CECE w. ROPS-cabin	kg	8.600
Grossweight	kg	28.000
Max. middle wheel load CECE	kg	3.500
Dimensions		
Track radius, inner	mm	5.700
Driving Characteristics		
Speed (1)	km/h	0- 19,0
Max. gradeability (dep. on soil con.)	%	27
Drive		
Engine manufacturer		Deutz
Engine type		TCD 3.6 L4
Emission stage		Stage V / TIER4f
Exhaust gas aftertreatment		DPF+SCR
Cooling		Liquid
Number of cylinders		4
Performance ISO 14396	kW	100,0
Performance SAE J 1995	hp	134,0
Speed	min-1	2.000
Electric equipment	V	12
Drive system		hydrost.
Driven axles		rear
Tyres		
Tyre size		11,00-20 18PR
Wheel track overlap	mm	35,0
Brakes		
Service brake		hydrost.
Parking brake		multi disc
Steering		
Steering system		2-p. pivoted
Steering method		hydrost.
Steering angle +/-	grad	30
Oscillation of tyres, front	grad	4
Level adjustment	mm	100
Sprinkler System		
Type of sprinkling		pressure
Capacities		
Fuel	l	200,0
Water	l	340,0
Volume of ballast compartment	m3	3,0

Technical modifications reserved. Machines may be shown with options.

Standard Equipment

☑ Operator's platform with:
- Steering wheel
- Travel lever with multi-functional arm rest
- Rotable and laterally sliding seat (-70°/+15°)

☑ Control panel for
- Speedometer
- Engine oil pressure
- Engine temperature
- Air filter vacuum
- Charge control
- Hydraulic oil filter
- Coolant Level
- fuel tank capacity
- Sprinkler system - tank capacity
- Hour meter

☑ Warning horn
☑ 2 Outside mirrors
☑ Indicator and hazard lights
☑ Working lights
☑ BOMAG ECOMODE
☑ Spraying system and scraper
☑ Back-up alarm
☑ Cold start device
☑ Service diagnostics tool

Optional Equipment

☐ * ROPS/FOPS with safety belt
☐ * ROPS-cabin with heating
☐ * ROPS cabin with air conditioning
☐ Temperature display
☐ Fire extinguisher
☐ Rearview camera
☐ Rotary beacon
☐ Additional lighting for cabin
☐ Radio Bluetooth
☐ Additive spraying system
☐ Central tyre inflating system
☐ Scraper coco mat, spring loaded and tiltable
☐ Scraper brush, spring loaded and tiltable
☐ Thermal aprons
☐ Profiled tyres
☐ Wheels MICHELIN 13/80R20
☐ Wheels DUNLOP 11,00-R20
☐ Waterproof frame
☐ Additional weight
  Max. ballast 10t
  Max. ballast 10t Flex
  Max. ballast 12t
  Max. ballast 12t Flex
  Max. ballast 16t
  Max. ballast 16t Flex
  Max. ballast 18t
  Max. ballast 20t
  Max. ballast 24t
  Max. ballast 28t
☐ Special painting
☐ Broadband buzzer
☐ BOMAG TELEMATIC
☐ Tool kit
☐ BOMAP compaction navigation with GPS

* Standard delivery with CE conformity (valid within European Union)#72

BOMAG
Hellerwald
D-56154 Boppard
P.O. Box 5162
Tel. (0)6742 - 1000
Fax (0)6742 - 3090

BOMAG
FAYAT GROUP