TECHNICAL DATA

SINGLE DRUM ROLLER

BW 226 RC-5 PL



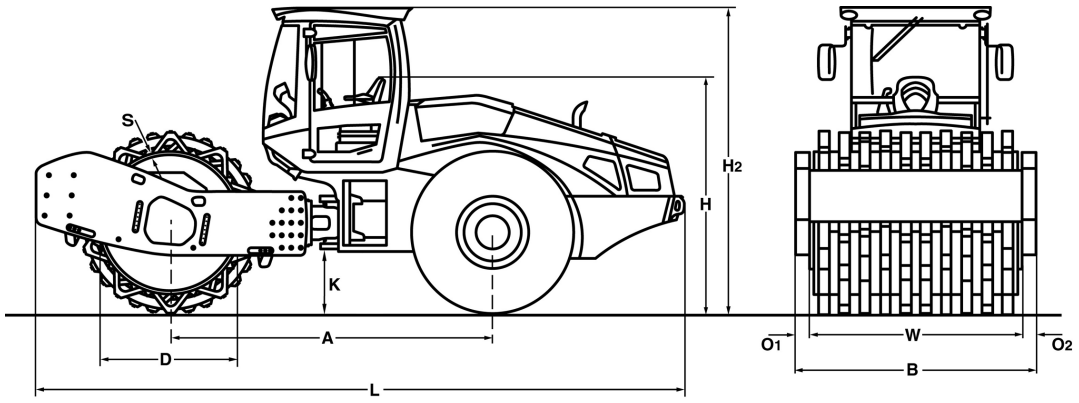

Dimensions in mm

	A	B	D	H	H2	K	L	O1	O2	S	W
BW 226 RC-5 PL	3320	2500	1480	2450	3200	530	6750	185	185	25	2130

Shipping dimensions in m3	without ROPS	with ROPS
BW 226 RC-5 PL	41,344	54,000

Machine type	Compaction output (m3/h)			
	Rock fill	Gravel, sand	Mixed soil	Silt, clay
BW 226 RC-5 PL	1180-2120		700-1350	385-770

Machine type	Compacted layer thickness (m)			
	Rock fill	Gravel, sand	Mixed soil	Silt, clay
BW 226 RC-5 PL	1,00		0,70	0,50

Technical Data

BOMAG
BW 226 RC-5 PL

Weights

Grossweight	kg	27.910
Operating weight CECE w. ROPS-cabin	kg	26.300
Axle load, drum CECE	kg	19.000
Axle load, wheels CECE	kg	7.300

Dimensions

Working width	mm	2.130
Track radius, inner	mm	4.180

Driving Characteristics

Speed	km/h	0- 9,0
Max. gradeability without/with vibr.	%	42/37

Drive

Engine manufacturer		Deutz
Engine type		TCD 6.1 L6
Emission stage		Stage V / TIER4f
Exhaust gas aftertreatment		DOC+DPF+SCR
Cooling		Liquid
Number of cylinders		6
Performance ISO 3046	kW	150,0
Performance SAE J 1995	hp	202,0
Speed	min-1	2.300
Fuel		Diesel
Electric equipment	V	12
Drive system		hydrost.
Drum driven		standard

Drums and Tyres

Tyre size		26.5-25 28PR

Brakes

Service brake		hydrost.
Parking brake		hydromec.

Steering

Steering system		oscil.artic.
Steering method		hydrost.
Steering / oscillating angle +/-	grad	35/12

Exciter system

Frequency	Hz	26
Amplitude (1)	mm	0 - 2,30
Centrifugal force	kN	500
Centrifugal force	t	51,0

Vario system

Drive system		hydrost.
Drive system		hydrost.

Capacities

Fuel	l	280,0

Technical modifications reserved. Machines may be shown with options.

Standard Equipment

- ☑ BOMAG ECOMODE
- ☑ BOMAG VARIOCONTROL
- ☑ TERRAMETER
- ☑ Warning, information and operation displays with LCD
- ☑ Hydrostatic travel and vibration drive
- ☑ Hydrostatic articulated steering
- ☑ Articulated joint lock
- ☑ Rear axle with twin spring accumulator brakes
- ☑ Self locking differential
- ☑ Warning horn
- ☑ Single lever control for travel and vibration
- ☑ Seat with arm rest and adj. for position and height
- ☑ 2 Scraper
- ☑ Emergency STOP
- ☑ Back-up alarm
- ☑ Working lights front / rear
- ☑ Double pump system for travel drive
- ☑ Rock tyre
- ☑ Loading mode
- ☑ Battery disconnect switch
- ☑ BOMAG TELEMATIC
- ☑ Tinted safety glass panes

Optional Equipment

- ☐ * ROPS/FOPS cabin with seat belts
  - Sliding window
- ☐ Air condition
- ☐ Rearview camera
- ☐ BOMAG ECOSTOP
- ☐ Radio (DAB)
- ☐ Indicator and hazard lights
- ☐ Special painting
- ☐ Rotary beacon
- ☐ Pre start cabin heating
- ☐ Environmentally compliant hydraulic oil
- ☐ Comfort package: Adjustable seat and adjustable steering column
- ☐ Comfort package PLUS:
  -Air suspended seat, swivel
  -Adjustable steering column
- ☐ Comfort package PLUS 2:
  -Air suspended seat, swivel
  -Adjustable steering column
- ☐ Reversing alarm buzzer with broad band audio
- ☐ LED working lights
- ☐ Fleet Management Access
- ☐ 360° Camera system
- ☐ Remote Control
- ☐ Fire extinguisher
- ☐ Seat belt warning indicator
- ☐ Protective ventilation pre-installation
- ☐ Cold start device
- ☐ Quick refuelling system
- ☐ BOMAP GPS antenna set
- ☐ BOMAP GPS antenna holder
- ☐ JOBLINK measuring technology interface

* Standard delivery with CE conformity (valid within European Union)

BOMAG
Hellerwald
D-56154 Boppard
P.O. Box 5162
Tel. (0)6742 - 1000
Fax (0)6742 - 3090

BOMAG
FAYAT GROUP