TECHNICAL DATA

SINGLE DRUM ROLLERS

BW 226 DH-5 PL, BW 226 PDH-5 PL



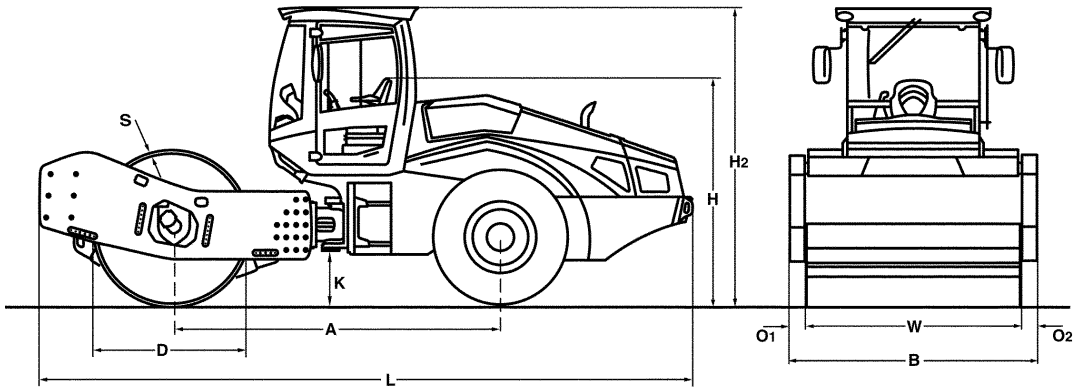

Dimensions in mm

	A	B	D	H	H2	K	L	O1	O2	S	W
BW 226 DH-5 PL	3360	2500	1600	2350	3080	430	6740	185	185	40	2130
BW 226 PDH-5 PL	3360	2500	1500	2340	3080	430	6740	185	185	35	2130

Shipping dimensions in m3	without ROPS	with ROPS
BW 226 DH-5 PL	39,598	51,898
BW 226 PDH-5 PL	39,429	51,898

Machine type	Compaction output (m3/h)			
	Rock fill	Gravel, sand	Mixed soil	Silt, clay
BW 226 DH-5 PL	1180-2120	880-1750	680-1200	350-700
BW 226 PDH-5 PL	1180-2120	880-1750	680-1200	380-730

Machine type	Compacted layer thickness (m)			
	Rock fill	Gravel, sand	Mixed soil	Silt, clay
BW 226 DH-5 PL	2,00	1,50	1,00	0,50
BW 226 PDH-5 PL	2,00	1,50	1,00	0,55

Technical Data		BOMAG BW 226 DH-5 PL	BOMAG BW 226 PDH-5 PL
Weights			
Grossweight	kg	26.710	27.500
Operating weight CECE w. ROPS-cabin	kg	25.000	25.740
Axle load, drum CECE	kg	17.070	17.800
Axle load, wheels CECE	kg	7.930	7.940
Static linear load CECE	kg/cm	80,1	
Dimensions			
Working width	mm	2.130	2.130
Track radius, inner	mm	4.260	4.260
Driving Characteristics			
Speed	km/h	0- 10,0	0- 9,0
Max. gradeability without/with vibr.	%	50/47	52/49
Drive			
Engine manufacturer		Deutz	Deutz
Engine type		TCD 6.1 L6	TCD 6.1 L6
Emission stage		Stage V / TIER4f	Stage V / TIER4f
Exhaust gas aftertreatment		DOC+DPF+SCR	DOC+DPF+SCR
Cooling		Liquid	Liquid
Number of cylinders		6	6
Performance ISO 3046	kW	150,0	150,0
Performance SAE J 1995	hp	202,0	201,0
Speed	min-1	2.300	2.300
Fuel		Diesel	Diesel
Electric equipment	V	12	12
Drive system		hydrost.	hydrost.
Drum driven		standard	standard
Drums and Tyres			
Number of pad feet			150
Area of one pad foot	cm2		137
Height of pad feet	mm		100
Tyre size		23.5-25 16PR	750/65 R26
Brakes			
Service brake		hydrost.	hydrost.
Parking brake		hydromec.	hydromec.
Steering			
Steering system		oscil.artic.	oscil.artic.
Steering method		hydrost.	hydrost.
Steering / oscillating angle +/-	grad	35/12	35/12
Exciter system			
Drive system		hydrost.	hydrost.
Frequency	Hz	26/26	26/26
Amplitude	mm	2,10/1,20	1,70/0,90
Centrifugal force	kN	328/187	328/175
Centrifugal force	t	33,5/19,1	33,5/17,9
Capacities			
Fuel	l	280,0	280,0

Technical modifications reserved. Machines may be shown with options.

Standard Equipment

- ☑ BOMAG ECOMODE
- ☑ Double pump system for travel drive
- ☑ Self locking differential
- ☑ Rear axle with twin spring accumulator brakes
- ☑ Hydrostatic travel and vibration drive
- ☑ Hydrostatic articulated steering
- ☑ Articulated joint lock
- ☑ Seat with arm rest and adj. for position and height
- ☑ Battery disconnect switch
- ☑ Single lever control for travel and vibration
- ☑ Warning, information and operation displays with LCD
- ☑ Loading mode
- ☑ Emergency STOP
- ☑ Working lights front / rear
- ☑ Back-up alarm
- ☑ 2 Scraper
- ☑ Warning horn
- ☑ Tractor tires (PDH)
- ☑ BOMAG TELEMATIC
- ☑ Tinted safety glass panes

Optional Equipment

- ☐ * ROPS/FOPS cabin with seat belts
  - Sliding window
- ☐ Rearview camera
- ☐ Air condition
- ☐ Radio (DAB)
- ☐ Pre start cabin heating
- ☐ Comfort package: Adjustable seat and adjustable steering column
- ☐ Comfort package PLUS:
  -Air suspended seat, swivel
  -Adjustable steering column
- ☐ Comfort package PLUS 2:
  -Air suspended seat, swivel
  -Adjustable steering column
- ☐ Rotary beacon
- ☐ Indicator and hazard lights
- ☐ BOMAG ECOSTOP
- ☐ ECONOMIZER
- ☐ TERRAMETER
- ☐ Fleet Management Access
- ☐ Special painting
- ☐ Padfoot segment kit (DH)
- ☐ Environmentally compliant hydraulic oil
- ☐ Measuring- and machine data interface
- ☐ Reversing alarm buzzer with broad band audio
- ☐ LED working lights
- ☐ Highly wear resistant drum (DH)
- ☐ 360° Camera system
- ☐ Remote Control
- ☐ Tractor tires (DH)
- ☐ Rock tyre (DH)
- ☐ Radial tires (DH)
- ☐ Protective ventilation pre-installation
- ☐ Cold start device
- ☐ Quick refuelling system
- ☐ BOMAP GPS antenna set
- ☐ BOMAP GPS antenna holder
- ☐ JOBLINK measuring technology interface

* Standard delivery with CE conformity (valid within European Union)

BOMAG
Hellerwald
D-56154 Boppard
P.O. Box 5162
Tel. (0)6742 - 1000
Fax (0)6742 - 3090

BOMAG
FAYAT GROUP