TECHNICAL DATA

SINGLE DRUM ROLLERS

BW 219 D-5 PL, BW 219 PD-5 PL



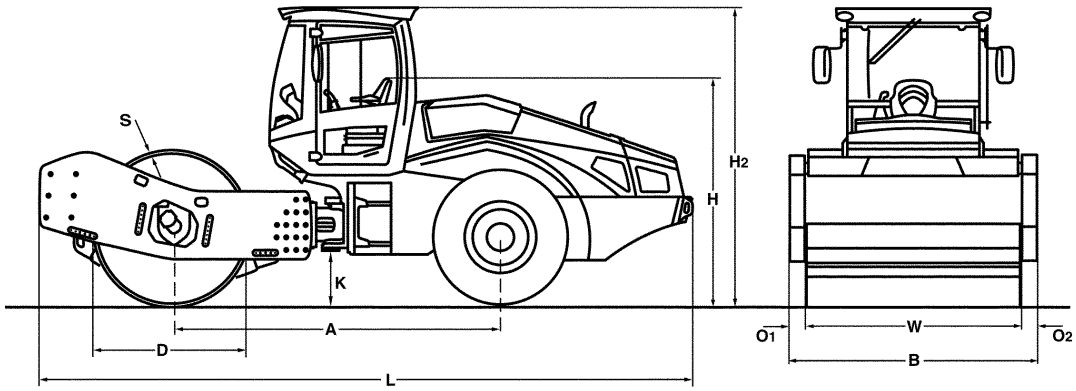

Dimensions in mm

	A	B	D	H	H2	K	L	O1	O2	S	W
BW 219 D-5 PL	3255	2300	1600	2300	3030	495	6500	85	85	40	2130
BW 219 PD-5 PL	3255	2300	1500	2300	3060	495	6500	85	85	35	2130

Shipping dimensions in m3	without ROPS	with ROPS
BW 219 D-5 PL	34,385	45,299
BW 219 PD-5 PL	34,385	45,747

Machine type	Compaction output (m3/h)			
	Rock fill	Gravel, sand	Mixed soil	Silt, clay
BW 219 D-5 PL	940-1880	700-1400	560-960	250-500
BW 219 PD-5 PL	940-1880	700-1400	560-960	280-560

Machine type	Compacted layer thickness (m)			
	Rock fill	Gravel, sand	Mixed soil	Silt, clay
BW 219 D-5 PL	1,40	1,00	0,70	0,30
BW 219 PD-5 PL	1,40	1,00	0,70	0,35

Technical Data		BOMAG BW 219 D-5 PL	BOMAG BW 219 PD-5 PL
Weights			
Grossweight	kg	22.000	21.000
Operating weight CECE w. ROPS-cabin	kg	19.400	20.000
Axle load, drum CECE	kg	12.800	13.200
Axle load, wheels CECE	kg	6.600	6.800
Static linear load CECE	kg/cm	60,1	
Dimensions			
Working width	mm	2.130	2.130
Track radius, inner	mm	4.120	4.120
Driving Characteristics			
Speed (1)	km/h	0- 4,0	0- 4,0
Speed (2)	km/h	0- 5,0	0- 5,0
Speed (3)	km/h	0- 6,0	0- 6,0
Speed (4)	km/h	0- 10,0	0- 10,0
Max. gradeability without/with vibr.	%	50/48	52/50
Drive			
Engine manufacturer		Deutz	Deutz
Engine type		TCD 6.1 L6	TCD 6.1 L6
Emission stage		Stage V / TIER4f	Stage V / TIER4f
Exhaust gas aftertreatment		DOC+DPF+SCR	DOC+DPF+SCR
Cooling		Liquid	Liquid
Number of cylinders		6	6
Performance ISO 3046	kW	150,0	150,0
Performance SAE J 1995	hp	202,0	202,0
Speed	min-1	2.300	2.300
Fuel		Diesel	Diesel
Electric equipment	V	12	12
Drive system		hydrost.	hydrost.
Drum driven		standard	standard
Drums and Tyres			
Number of pad feet			150
Area of one pad foot	cm2		137
Height of pad feet	mm		100
Tyre size		23.1-26 12PR	23.1-26 12TL
Brakes			
Service brake		hydrost.	hydrost.
Parking brake		hydromec.	hydromec.
Steering			
Steering system		oscil.artic.	oscil.artic.
Steering method		hydrost.	hydrost.
Steering / oscillating angle +/-	grad	35/12	35/12
Exciter system			
Drive system		hydrost.	hydrost.
Frequency	Hz	26/31	26/31
Amplitude	mm	2,10/1,20	1,90/1,00
Centrifugal force	kN	328/266	328/245
Centrifugal force	t	33,5/27,1	33,5/25,0
Capacities			
Fuel	l	280,0	280,0

Technical modifications reserved. Machines may be shown with options.

Standard Equipment

- ☑ BOMAG ECOMODE
- ☑ Self locking differential
- ☑ Rear axle with twin spring accumulator brakes
- ☑ Hydrostatic travel and vibration drive
- ☑ Hydrostatic articulated steering
- ☑ Articulated joint lock
- ☑ Seat with arm rest and adj. for position and height
- ☑ Battery disconnect switch
- ☑ Single lever control for travel and vibration
- ☑ Warning, information and operation displays with LCD
- ☑ Loading mode
- ☑ Emergency STOP
- ☑ Working lights front / rear
- ☑ Back-up alarm
- ☑ 2 Scraper
- ☑ Warning horn
- ☑ BOMAG TELEMATIC
- ☑ Tinted safety glass panes

Optional Equipment

- ☐ * ROPS/FOPS cabin with seat belts
  - Sliding window
- ☐ Rearview camera
- ☐ Air condition
- ☐ Radio (DAB)
- ☐ Pre start cabin heating
- ☐ Comfort package: Adjustable seat and adjustable steering column
- ☐ Comfort package PLUS:
  -Air suspended seat, swivel
  -Adjustable steering column
- ☐ Comfort package PLUS 2:
  -Air suspended seat, swivel
  -Adjustable steering column
- ☐ Rotary beacon
- ☐ Indicator and hazard lights
- ☐ BOMAG ECOSTOP
- ☐ ECONOMIZER
- ☐ TERRAMETER
- ☐ Fleet Management Access
- ☐ Special painting
- ☐ Padfoot segment kit (D)
- ☐ Environmentally compliant hydraulic oil
- ☐ Measuring- and machine data interface
- ☐ Reversing alarm buzzer with broad band audio
- ☐ LED working lights
- ☐ Highly wear resistant drum (D)
- ☐ 360° Camera system
- ☐ Remote Control
- ☐ Tractor tires (D)
- ☐ Rock tyre (D)
- ☐ Radial tires (D)
- ☐ Protective ventilation pre-installation
- ☐ Cold start device
- ☐ BOMAP GPS antenna set
- ☐ BOMAP GPS antenna holder
- ☐ JOBLINK measuring technology interface

* Standard delivery with CE conformity (valid within European Union)

BOMAG
Hellerwald
D-56154 Boppard
P.O. Box 5162
Tel. (0)6742 - 1000
Fax (0)6742 - 3090

BOMAG
FAYAT GROUP