TECHNICAL DATA

SINGLE DRUM ROLLERS

BW 216 DH-5 PL, BW 216 PDH-5 PL



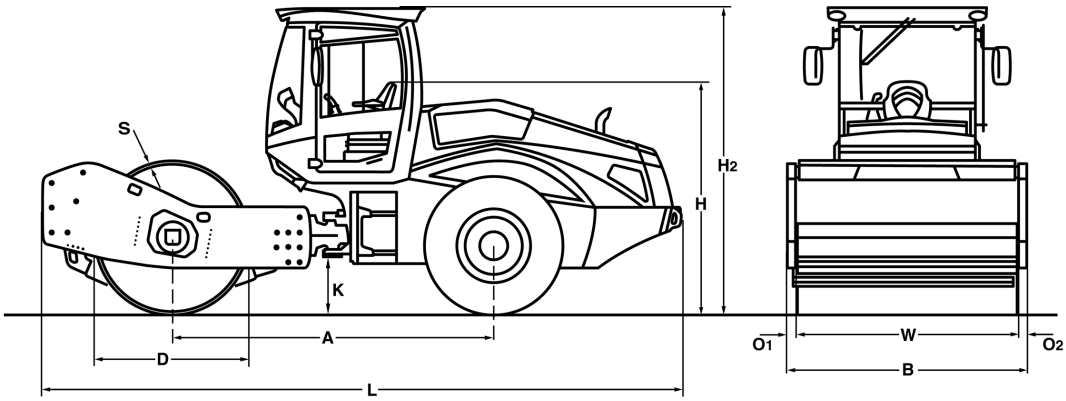

Dimensions in mm

	A	B	D	H	H2	K	L	O1	O2	S	W
BW 216 DH-5 PL	3113	2300	1500	2250	2990	490	6220	85	85	30	2130
BW 216 PDH-5 PL	3113	2300	1480	2250	2990	490	6220	85	85	25	2130

Shipping dimensions in m3	without ROPS	with ROPS
BW 216 DH-5 PL	32,189	42,775
BW 216 PDH-5 PL	32,189	42,775

Machine type	Compaction output (m3/h)			
	Rock fill	Gravel, sand	Mixed soil	Silt, clay
BW 216 DH-5 PL	700-1400	480-960	360-720	210-420
BW 216 PDH-5 PL	700-1400	480-960	360-720	250-580

Machine type	Compacted layer thickness (m)			
	Rock fill	Gravel, sand	Mixed soil	Silt, clay
BW 216 DH-5 PL	1,10	0,75	0,55	0,30
BW 216 PDH-5 PL	1,20	0,80	0,60	0,35

Technical Data		BOMAG BW 216 DH-5 PL	BOMAG BW 216 PDH-5 PL
Weights			
Grossweight	kg	17.910	17.950
Operating weight CECE w. ROPS-cabin	kg	16.000	17.100
Axle load, drum CECE	kg	10.800	11.900
Axle load, wheels CECE	kg	5.200	5.200
Static linear load CECE	kg/cm	50,7	
Dimensions			
Working width	mm	2.130	2.130
Track radius, inner	mm	3.875	3.875
Driving Characteristics			
Speed	km/h	0- 10,0	0- 10,0
Max. gradeability without/with vibr.	%	59/57	61/59
Drive			
Engine manufacturer		Deutz	Deutz
Engine type		TCD 4.1 L04	TCD 4.1 L04
Emission stage		Stage V / TIER4f	Stage V / TIER4f
Exhaust gas aftertreatment		DOC+DPF+SCR	DOC+DPF+SCR
Cooling		Liquid	Liquid
Number of cylinders		4	4
Performance ISO 3046	kW	115,0	115,0
Performance SAE J 1995	hp	155,0	155,0
Speed	min-1	2.100	2.100
Fuel		Diesel	Diesel
Electric equipment	V	12	12
Drive system		hydrost.	hydrost.
Drum driven		standard	standard
Drums and Tyres			
Number of pad feet			150
Area of one pad foot	cm2		137
Height of pad feet	mm		100
Tyre size		23.1-26 12PR	23.1-26 12PR
Brakes			
Service brake		hydrost.	hydrost.
Parking brake		hydromec.	hydromec.
Steering			
Steering system		oscil.artic.	oscil.artic.
Steering method		hydrost.	hydrost.
Steering / oscillating angle +/-	grad	35/12	35/12
Exciter system			
Drive system		hydrost.	hydrost.
Frequency	Hz	30/36	30/36
Amplitude	mm	2,10/1,10	1,70/0,90
Centrifugal force	kN	285/220	285/217
Centrifugal force	t	29,1/22,4	29,1/22,1
Capacities			
Fuel	l	250,0	250,0

Technical modifications reserved. Machines may be shown with options.

Standard Equipment

- ☑ BOMAG ECOMODE
- ☑ Double pump system for travel drive
- ☑ Self locking differential
- ☑ Rear axle with twin spring accumulator brakes
- ☑ Hydrostatic travel and vibration drive
- ☑ Hydrostatic articulated steering
- ☑ Articulated joint lock
- ☑ Seat with arm rest and adj. for position and height
- ☑ Battery disconnect switch
- ☑ Single lever control for travel and vibration
- ☑ Warning, information and operation displays with LCD
- ☑ Loading mode
- ☑ Emergency STOP
- ☑ Working lights front / rear
- ☑ Back-up alarm
- ☑ 2 Scraper
- ☑ Warning horn
- ☑ Tractor tires (PDH)
- ☑ BOMAG TELEMATIC
- ☑ Tinted safety glass panes

Optional Equipment

- ☐ * ROPS/FOPS cabin with seat belts
  - Sliding window
- ☐ Rearview camera
- ☐ Air condition
- ☐ Radio (DAB)
- ☐ Pre start cabin heating
- ☐ Comfort package: Adjustable seat and adjustable steering column
- ☐ Comfort package PLUS:
  -Air suspended seat, swivel
  -Adjustable steering column
- ☐ Comfort package PLUS 2:
  -Air suspended seat, swivel
  -Adjustable steering column
- ☐ Rotary beacon
- ☐ Indicator and hazard lights
- ☐ BOMAG ECOSTOP
- ☐ ECONOMIZER
- ☐ TERRAMETER
- ☐ Fleet Management Access
- ☐ Special painting
- ☐ Padfoot segment kit (DH)
- ☐ Environmentally compliant hydraulic oil
- ☐ Measuring- and machine data interface
- ☐ LED working lights
- ☐ Reversing alarm buzzer with broad band audio
- ☐ 360° Camera system
- ☐ Remote Control
- ☐ Tractor tires (DH)
- ☐ Rock tyre (DH)
- ☐ Radial tires (DH)
- ☐ Protective ventilation pre-installation
- ☐ Cold start device
- ☐ BOMAP GPS antenna set
- ☐ BOMAP GPS antenna holder
- ☐ Tablet holder set
- ☐ JOBLINK measuring technology interface
- ☐ Highly wear resistant drum (DH)

* Standard delivery with CE conformity (valid within European Union)

BOMAG
Hellerwald
D-56154 Boppard
P.O. Box 5162
Tel. (0)6742 - 1000
Fax (0)6742 - 3090

BOMAG
FAYAT GROUP