BOMAG
FAYAT GROUP

TECHNICAL DATA

PNEUMATIC TYRED ROLLERS

BW 18 RH



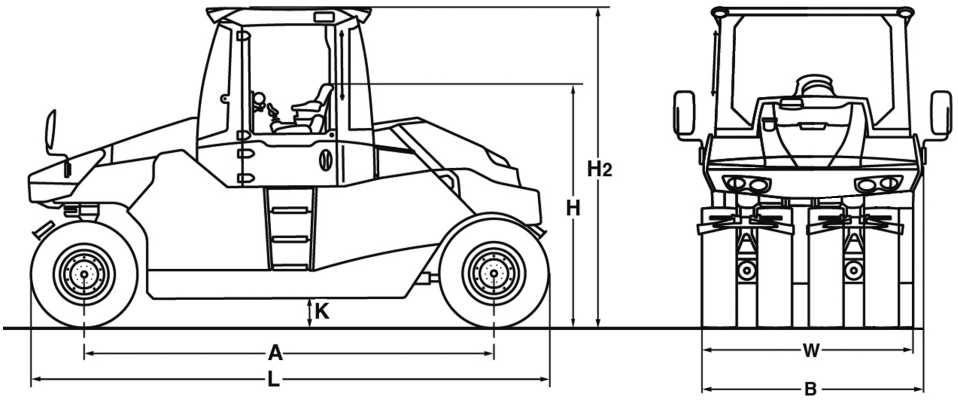

Dimensions in mm

	A	B	H	H2	K	L	W
BW 18 RH	3875	2070	2287	3050	280	4945	2045

Shipping dimensions in m3	without ROPS	with ROPS
BW 18 RH	23,410	31,220

Machine type	Compaction output (m3/h) (layer thickness) at recommended soil layer thicknesses		
	Silt, clay (0,20 m)	**Gravel, sand (0,30 m)**	**Mixed soil (0,25 m)**
BW 18 RH	120-150	120-200	80-180

Machine type	Compaction output (t/h) at different asphalt layer thicknesses		
	2-4 cm	**6-8 cm**	**10-12 cm**
BW 18 RH	30-80	60-100	80-150

Technical Data		BOMAG BW 18 RH
Weights		
Operating weight CECE w. ROPS-cabin	kg	8.600
Grossweight	kg	18.000
Max. middle wheel load CECE	kg	2.250
Dimensions		
Track radius, inner	mm	5.700
Driving Characteristics		
Speed (1)	km/h	0- 16,0
Max. gradeability (dep. on soil con.)	%	27
Drive		
Engine manufacturer		Deutz
Engine type		TCD 2.9 L4 HT
Emission stage		Stage V / TIER4f
Exhaust gas aftertreatment		DOC+DPF
Cooling		Liquid
Number of cylinders		4
Performance ISO 14396	kW	55,4
Performance SAE J 1995	hp	74,2
Speed	min-1	2.200
Electric equipment	V	12
Drive system		hydrost.
Driven axles		rear
Tyres		
Tyre size		11,00-20 18PR
Wheel track overlap	mm	35,0
Brakes		
Service brake		hydrost.
Parking brake		multi disc
Steering		
Steering system		2-p. pivoted
Steering method		hydrost.
Steering angle +/-	grad	30
Oscillation of tyres, front	grad	4
Level adjustment	mm	100
Sprinkler System		
Type of sprinkling		pressure
Capacities		
Fuel	l	200,0
Water	l	340,0
Volume of ballast compartment	m3	3,0

Technical modifications reserved. Machines may be shown with options.

Standard Equipment

☑ Operator's platform with:
- Steering wheel
- Travel lever with multi-functional arm rest
- Rotable and laterally sliding seat (-70°/+15°)

☑ Control panel for
- Speedometer
- Engine oil pressure
- Engine temperature
- Air filter vacuum
- Charge control
- Hydraulic oil filter
- Coolant Level
- fuel tank capacity
- Sprinkler system - tank capacity
- Hour meter

☑ Warning horn
☑ 2 Outside mirrors
☑ Indicator and hazard lights
☑ Working lights
☑ BOMAG ECOMODE
☑ Spraying system and scraper
☑ Back-up alarm
☑ Cold start device
☑ Service diagnostics tool

Optional Equipment

☐ ROPS/FOPS with safety belt
☐ * ROPS-cabin with heating
☐ * ROPS cabin with air conditioning
☐ Temperature display
☐ Fire extinguisher
☐ Rearview camera
☐ Rotary beacon
☐ Additional lighting for cabin
☐ Radio Bluetooth
☐ Additive spraying system
☐ Central tyre inflating system
☐ Scraper coco mat, spring loaded and tiltable
☐ Scraper brush, spring loaded and tiltable
☐ Thermal aprons
☐ Wheels MICHELIN 13/80R20
☐ Wheels DUNLOP 11,00-R20
☐ Waterproof frame
☐ Additional weight
Max. ballast 10t
Max. ballast 10t Flex
Max. ballast 12t
Max. ballast 12t Flex
Max. ballast 16t
Max. ballast 16t Flex
Max. ballast 18t
☐ Special painting
☐ Broadband buzzer
☐ BOMAG TELEMATIC
☐ Tool kit
☐ BOMAP compaction navigation with GPS

* Standard delivery with CE conformity (valid within European Union)#72

BOMAG
Hellerwald
D-56154 Boppard
P.O. Box 5162
Tel. (0)6742 - 1000
Fax (0)6742 - 3090

BOMAG FAYAT GROUP