TECHNICAL DATA

SINGLE DRUM ROLLER

BW 177 BVC-5 PL



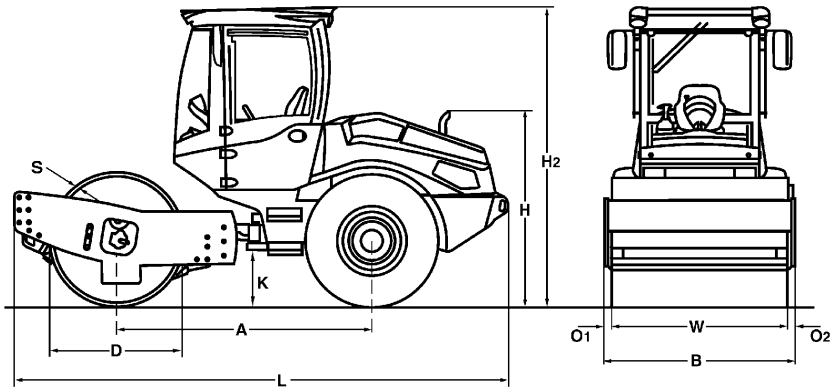

Dimensions in mm

	A	B	D	H	H2	K	L	O1	O2	S	W
BW 177 BVC-5 PL	2350	1820	1230	1750	2800	380	4550	65	65	20	1690

Shipping dimensions in m3	**without ROPS**	**with ROPS**
BW 177 BVC-5 PL	14,492	23,187

Machine type	**Compaction output (m3/h)**			
	Rock fill	**Gravel, sand**	**Mixed soil**	**Silt, clay**
BW 177 BVC-5 PL	370-740	240-480	190-380	95-190

Machine type	**Compacted layer thickness (m)**			
	Rock fill	**Gravel, sand**	**Mixed soil**	**Silt, clay**
BW 177 BVC-5 PL	0,80	0,50	0,40	0,20

Technical Data

BOMAG
BW 177 BVC-5 PL

Weights

Grossweight	kg	8.000
Operating weight CECE w. ROPS-cabin	kg	7.000
Axle load, drum CECE	kg	4.250
Axle load, wheels CECE	kg	2.750
Static linear load CECE	kg/cm	25,1

Dimensions

Working width	mm	1.690
Track radius, inner	mm	2.975

Driving Characteristics

Speed (1)	km/h	0-10
Max. gradeability without/with vibr.	%	60/57

Drive

Engine manufacturer		Kubota
Engine type		V3307 CR-T
Emission stage		Stage V / TIER4f
Exhaust gas aftertreatment		DOC+DPF
Cooling		water
Number of cylinders		4
Performance ISO 3046	kW	53,8
Performance SAE J 1995	hp	75,0
Speed	min-1	2.400
Fuel		Diesel
Electric equipment	V	12
Drive system		hydrost.
Drum driven		standard

Drums and Tyres

Tyre size		14.9-24/8PR

Brakes

Service brake		hydrost.
Parking brake		hydromec.

Steering

Steering system		oscil.artic.
Steering method		hydrost.
Steering / oscillating angle +/-	grad	35/12

Exciter system

Drive system		hydrost.
Frequency (1)	Hz	28
Amplitude (1)	mm	0 - 2,20
Centrifugal force	kN	150
Centrifugal force	t	15,3

Capacities

Fuel	l	110,0

Technical modifications reserved. Machines may be shown with options.

Standard Equipment

- ☑ BOMAG ECOMODE
- ☑ BOMAG VARIOCONTROL
- ☑ TERRAMETER
- ☑ Oscillation mode
- ☑ Double pump system for travel drive
- ☑ Self locking differential
- ☑ Rear axle with twin spring accumulator brakes
- ☑ Hydrostatic travel and vibration drive
- ☑ Hydrostatic articulated steering
- ☑ Articulated joint lock
- ☑ Warning, information and operation displays
- ☑ Measuring- and machine data interface
- ☑ Single lever control for travel and vibration
- ☑ Back-up warning system
- ☑ 2 Contact scrapers Plastic
- ☑ BOMAG TELEMATIC
- ☑ Tinted safety glass panes

Optional Equipment

- ☐ ROPS cabin with seat belts
- ☐ Air condition
- ☐ Sliding window
- ☐ Radio (DAB)
- ☐ BOMAG ECOSTOP
- ☐ Rotary beacon
- ☐ Indicator and hazard lights
- ☐ Padfoot segment kit
- ☐ Special painting
- ☐ Environmentally compliant hydraulic oil
- ☐ Rearview camera
- ☐ Tractor tires
- ☐ LED working lights
- ☐ Radio remote control
- ☐ 360° Camera system
- ☐ Fleet Management Access
- ☐ Remote Control
- ☐ Tractor tires
- ☐ Reversing alarm buzzer with broad band audio
- ☐ Comfort package
- ☐ BOMAP GPS antenna set
- ☐ BOMAP GPS antenna holder
- ☐ Tablet holder set
- ☐ JOBLINK measuring technology interface
- ☐ Cold start device

BOMAG
Hellerwald
D-56154 Boppard
P.O. Box 5162
Tel. (0)6742 - 1000
Fax (0)6742 - 3090

BOMAG
FAYAT GROUP