TECHNICAL DATA

TANDEM ROLLERS

BW 161 AD-5, BW 190 AD-5, BW 202 AD-5



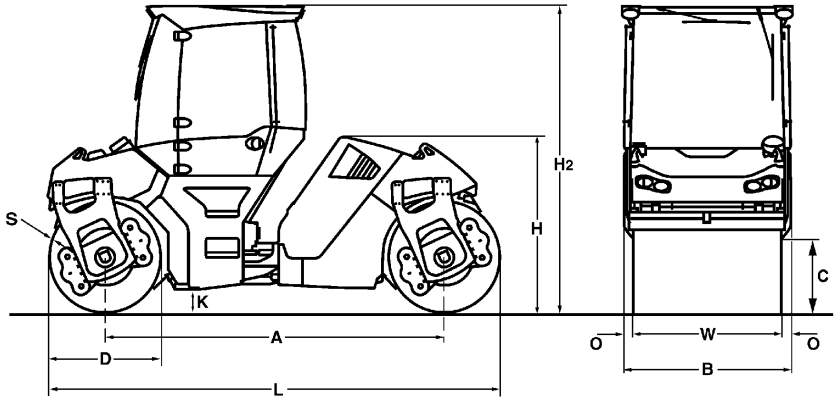

Dimensions in mm

	A	B	C	D	H	H2	K	L	O	S	W
BW 161 AD-5	3620	1836	670	1220	2315	3050	250	4840	78	17	1680
BW 190 AD-5	3620	2146	670	1220	2315	3050	250	4840	78	19	1990
BW 202 AD-5	3620	2291	670	1220	2315	3050	250	4840	78	19	2135

Shipping dimensions in m3	**without ROPS**	**with ROPS**
BW 161 AD-5	20,572	27,103
BW 190 AD-5	24,045	31,679
BW 202 AD-5	25,670	33,820

Machine type	**Compaction output (m3/h) at recommended soil layer thicknesses**		
	Gravel, sand	**Mixed soil**	**Silt, clay**
BW 161 AD-5	150-320	140-260	100-220
BW 190 AD-5	260-500	180-360	140-220
BW 202 AD-5	280-550	200-400	150-250

Machine type	**Compaction output (t/h) at different asphalt layer thicknesses**		
	2-4 cm	**6-8 cm**	**10-14 cm**
BW 161 AD-5	50-100	100-200	150-230
BW 190 AD-5	70-120	120-230	190-300
BW 202 AD-5	80-160	130-270	200-340

Technical Data		BOMAG BW 161 AD-5	BOMAG BW 190 AD-5	BOMAG BW 202 AD-5
Weights				
Operating weight CECE w. cab.	kg	10.000	12.050	12.300
Axle load, front CECE	kg	5.100	6.200	6.350
Axle load, rear CECE	kg	4.900	5.850	5.950
Static linear load, front CECE	kg/cm	30,4	31,0	29,7
Static linear load, rear CECE	kg/cm	29,2	29,3	27,9
Grossweight	kg	11.000	13.000	13.500
Dimensions				
Track radius, inner	mm	4.900	4.745	4.673
Length (without towing hitch)	mm	4.840	4.840	4.840
Driving Characteristics				
Max. travel speed	km/h	0- 12,0	0- 12,0	0- 12,0
Max. gradeability without/with vibr. ...	%	35/30	35/30	35/30
Drive				
Engine manufacturer		Deutz	Deutz	Deutz
Engine type		TCD 3.6 L4	TCD 3.6 L4	TCD 3.6 L4
Emission stage		Stage V / TIER4f	Stage V / TIER4f	Stage V / TIER4f
Exhaust gas aftertreatment		DPF+SCR	DPF+SCR	DPF+SCR
Cooling		Liquid	Liquid	Liquid
Number of cylinders		4	4	4
Performance ISO 14396	kW	95,0	95,0	95,0
Performance SAE J 1995	hp	127,0	127,0	127,0
Speed	min-1	2.300	2.300	2.300
Electric equipment	V	12	12	12
Brakes				
Service brake		hydrost.	hydrost.	hydrost.
Parking brake		multi disc	multi disc	multi disc
Steering				
Steering system		oscil.artic.	oscil.artic.	oscil.artic.
Exciter system				
Vibrating drum		front + rear	front + rear	front + rear
Autom. vibr. shut off		standard	standard	standard
Frequency	Hz	40/53	40/55	40/53
Amplitude	mm	0,87/0,44	0,90/0,34	0,84/0,31
Centrifugal force	kN	95/90	126/88	126/88
Centrifugal force	t	9,7/9,2	12,8/9,0	12,8/9,0
Capacities				
Fuel	l	145,0	145,0	145,0
Water	l	750,0	750,0	750,0

Technical modifications reserved. Machines may be shown with options.

Standard Equipment

- ☑ 2 amplitudes / 2 frequencies
- ☑ ECOMODE
- ☑ Autom. vibration operation
- ☑ Individual vibration control
- ☑ Driver's seat, slewable
  - laterally slidable with steering wheel
- ☑ Emergency stop button
- ☑ On-board computer
  - engine speed
  - Speedometer
  - Fuel consumption
  - Engine temperature
- ☑ V-belt protection
- ☑ Pressure sprinkling system with 2 pumps
- ☑ Indicator and hazard lights
- ☑ Back-up alarm
- ☑ Battery disconnect switch
- ☑ Compartments for documents and tools

Optional Equipment

- ☐ ROPS cabin with seat belts
  + heating, Ventilation
  + 4 Working head lights
- ☐ ECONOMIZER
- ☐ ROPS cabin with air conditioning
- ☐ Rotary beacon
- ☐ Crab-walk to both sides (170mm)
- ☐ 2 LED-lights for cabin roof (flatbeam)
- ☐ Edge cutter
- ☐ Special painting
- ☐ Environmentally compliant hydraulic oil
- ☐ Radio/Radio preparation
- ☐ ROPS/FOPS with safety belt
- ☐ Precision spreader BS180 laterally slidable
- ☐ Precision spreader BS180
- ☐ Asphalt temperature display
- ☐ Lighting for drum edge front and rear
- ☐ Seat heating
- ☐ Frequency
  67Hz(BW161),70Hz(BW190/202)
- ☐ Approval by the German TÜV
- ☐ BOMAG TELEMATIC POWER
- ☐ Outside mirrors
- ☐ BOMAP compaction navigation with GPS

BOMAG
Hellerwald
D-56154 Boppard
P.O. Box 5162
Tel. (0)6742 - 1000
Fax (0)6742 - 3090

BOMAG
FAYAT GROUP