TECHNICAL DATA

ASPHALT MANAGER 2

BW 151 AD-5 AM, BW 161 AD-5 AM



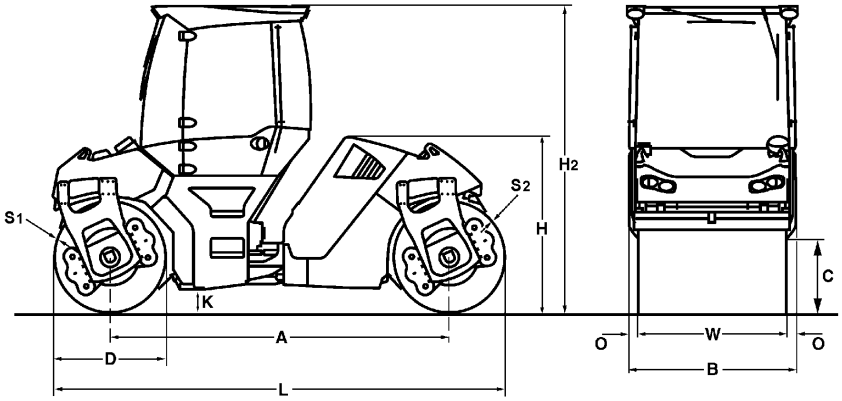

Dimensions in mm

	A	B	C	D	H	H2	K	L	O	S1	S2	W
BW 151 AD-5 AM	3300	1844	730	1100	2240	3000	250	4400	82	16	16	1680
BW 161 AD-5 AM	3620	1836	670	1220	2315	3050	250	4840	78	19	17	1680

Shipping dimensions in m3	**without ROPS**	**with ROPS**
BW 151 AD-5 AM	18,174	24,341
BW 161 AD-5 AM	20,572	27,103

Machine type	**Compaction output (m3/h) at recommended soil layer thicknesses**		
	Gravel, sand	**Mixed soil**	**Silt, clay**
BW 151 AD-5 AM	150-300	110-230	75-180
BW 161 AD-5 AM	180-340	150-280	110-180

Machine type	**Compaction output (t/h) at different asphalt layer thicknesses**		
	2-4 cm	**6-8 cm**	**10-14 cm**
BW 151 AD-5 AM	50-90	100-180	150-210
BW 161 AD-5 AM	60-130	100-230	160-280

Technical Data		BOMAG BW 151 AD-5 AM	BOMAG BW 161 AD-5 AM
Weights			
Operating weight CECE w. ROPS-cabin	kg	7.900	10.200
Grossweight	kg	9.000	11.500
Axle load, front CECE	kg	4.050	5.300
Axle load, rear CECE	kg	3.850	4.900
Static linear load, front CECE	kg/cm	24,1	31,6
Static linear load, rear CECE	kg/cm	22,9	29,2
Dimensions			
Track radius, inner	mm	4.390	4.900
Length (without towing hitch)	mm	4.400	4.840
Driving Characteristics			
Max. travel speed	km/h	0- 12,0	0- 12,0
Max. gradeability without/with vibr.	%	40/30	40/30
Drive			
Engine manufacturer		Kubota	Deutz
Engine type		V3307 CR-T	TCD 3.6 L4
Emission stage		Stage V / TIER4f	Stage V / TIER4f
Exhaust gas aftertreatment		DOC+DPF	DPF+SCR
Cooling		Liquid	Liquid
Number of cylinders		4	4
Performance ISO 14396	kW	53,8	95,0
Performance SAE J 1995	hp	72,1	127,0
Speed	min-1	2.400	2.300
Electric equipment	V	12	12
Brakes			
Service brake		hydrost.	hydrost.
Parking brake		multi disc	multi disc
Steering			
Steering system		oscil.artic.	oscil.artic.
Exciter system			
Vibrating drum		rear	rear
Autom. vibr. shut off		standard	standard
Frequency	Hz	46/45	46/45
Amplitude	mm	0,68/0,27	0,87/0,44
Centrifugal force	kN	75/30	97/51
Centrifugal force	t	7,6/3,1	9,9/5,2
Vario system			
ASPHALT MANAGER		front	front
Frequency	Hz	46	46
Amplitude directed		autom./variable	autom./variable
Amplitude	mm	0- 0,89	0- 0,92
Centifugal force	kN	142	152
Centifugal force	t	14,5	15,5
Capacities			
Fuel	l	125,0	145,0
Water	l	600,0	750,0

Technical modifications reserved. Machines may be shown with options.

Standard Equipment

- ☑ ASPHALT MANAGER 2
- ☑ Highly wear resistant AM drum
- ☑ Oscillation mode
- ☑ 2 amplitudes / 2 frequencies rear
- ☑ ECOMODE
- ☑ Autom. vibration operation
- ☑ Individual vibration control
- ☑ Swivel seat with integrated electronic steering wheel
- ☑ Emergency stop button
- ☑ V-belt protection
- ☑ Pressure sprinkling system with 2 pumps
- ☑ Indicator and hazard lights
- ☑ Back-up alarm
- ☑ Battery disconnect switch
- ☑ Compartments for documents and tools
- ☑ BOMAG OPERATION PANEL (BOP)
- ☑ EVIB-Control panel
- ☑ Asphalt temperature display

Optional Equipment

- ☐ ROPS cabin with seat belts
  + heating, Ventilation
  + 4 Working head lights
- ☐ ROPS cabin with air conditioning
- ☐ Rotary beacon
- ☐ Crab-walk to both sides (170mm)
- ☐ 2 LED-lights for cabin roof (flatbeam)
- ☐ Edge cutter
- ☐ Special painting
- ☐ Environmentally compliant hydraulic oil
- ☐ Radio/Radio preparation
- ☐ Precision spreader laterally slidable
- ☐ Precision spreader
- ☐ Printer for ASPHALT MANAGER 2
- ☐ Lighting for drum edge front and rear
- ☐ Seat heating
- ☐ Approval by the German TÜV
- ☐ BOMAG TELEMATIC POWER
- ☐ Outside mirrors
- ☐ BOMAP compaction navigation with GPS

BOMAG
Hellerwald
D-56154 Boppard
P.O. Box 5162
Tel. (0)6742 - 1000
Fax (0)6742 - 3090

BOMAG
FAYAT GROUP