BOMAG
FAYAT GROUP

TECHNICAL DATA

COMBINATION ROLLERS

BW 151 AC-5, BW 161 AC-5



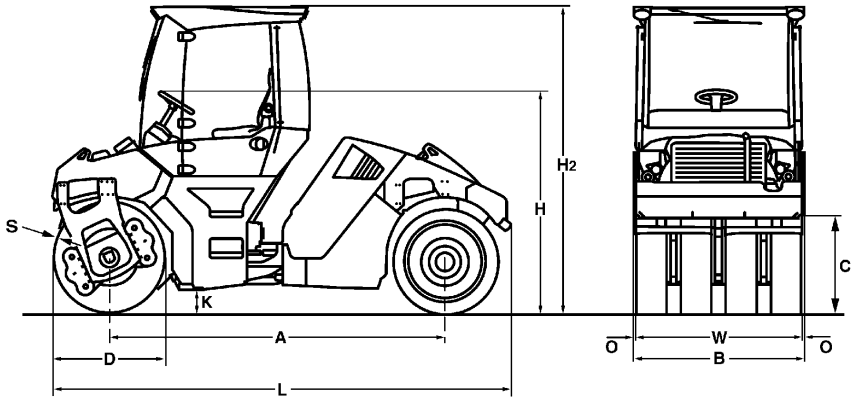

Dimensions in mm

	A	B	C	D	H	H2	K	L	O	S	W
BW 151 AC-5	3300	1844	730	1100	2240	3000	250	4400	82	16	1680
BW 161 AC-5	3620	1836	670	1220	2315	3050	250	4840	78	17	1680

Shipping dimensions in m3	without ROPS	with ROPS
BW 151 AC-5	18,174	24,341
BW 161 AC-5	20,572	27,103

Machine type	Compaction output (t/h) at different asphalt layer thicknesses		
	2-4 cm	**6-8 cm**	**10-14 cm**
BW 151 AC-5	40-80	100-180	140-200
BW 161 AC-5	40-80	100-180	140-200

Technical Data		BOMAG BW 151 AC-5	BOMAG BW 161 AC-5
Weights			
Operating weight CECE w. ROPS-cabin	kg	7.500	9.700
Static linear load CECE	kg/cm	23,2	30,4
Axle load, drum CECE	kg	3.900	5.100
Axle load, wheels CECE	kg	3.600	4.600
Wheel load CECE	kg	900	1.150
Grossweight	kg	8.500	11.200
Dimensions			
Track radius, inner	mm	4.390	4.900
Length (without towing hitch)	mm	4.400	4.840
Driving Characteristics			
Max. travel speed	km/h	0- 12,0	0- 12,0
Max. gradeability without/with vibr.	%	40/30	35/30
Drive			
Engine manufacturer		Kubota	Deutz
Engine type		V3307 CR-T	TCD 3.6 L4
Emission stage		Stage V / TIER4f	Stage V / TIER4f
Exhaust gas aftertreatment		DOC+DPF	DPF+SCR
Cooling		Liquid	Liquid
Number of cylinders		4	4
Performance ISO 14396	kW	53,8	95,0
Performance SAE J 1995	hp	72,1	127,0
Speed	min-1	2.400	2.300
Brakes			
Service brake		hydrost.	hydrost.
Parking brake		multi disc	multi disc
Steering			
Steering system		oscil.artic.	oscil.artic.
Exciter system			
Autom. vibr. shut off		standard	standard
Frequency	Hz	45/55	40/53
Amplitude	mm	0,68/0,27	0,87/0,44
Centrifugal force	kN	69/41	95/90
Centrifugal force	t	7,0/4,2	9,7/9,2
Capacities			
Fuel	l	125,0	145,0
Water	l	600,0	750,0
Emulsion	l	45,0	45,0

Technical modifications reserved. Machines may be shown with options.

Standard Equipment

- ☑ 2 amplitudes / 2 frequencies
- ☑ ECOMODE
- ☑ Autom. vibration operation
- ☑ Driver's seat, slewable (-15/+75°)
  - laterally slidable with steering wheel
- ☑ 2 travel levers with integrated switches for vibration
  + Edge pressing roller
  + Crab steer right/left
  + Warning horn
- ☑ On-board computer
  - engine oil temperature
  - Speedometer
  - Fuel consumption
  - Engine temperature
- ☑ V-belt protection
- ☑ Compartments for documents and tools
- ☑ Pressure sprinkling system with 3 pumps (Water/Emulsion)
- ☑ Back-up alarm
- ☑ Battery disconnect switch
- ☑ Emergency stop button

Optional Equipment

- ☐ ROPS cabin with seat belts
  + heating, Ventilation
  + 4 Working head lights
- ☐ ROPS cabin with air conditioning
- ☐ Rotary beacon
- ☐ Crab-walk to both sides (170mm)
- ☐ 2 LED-lights for cabin roof (flatbeam)
- ☐ Edge cutter
- ☐ Special painting
- ☐ Environmentally compliant hydraulic oil
- ☐ Radio/Radio preparation
- ☐ ROPS/FOPS with safety belt
- ☐ Precision spreader BS180
- ☐ Precision spreader BS180 laterally slidable
- ☐ Asphalt temperature display
- ☐ Lighting for drum edge front and rear
- ☐ Seat heating
- ☐ Frequency 70Hz
- ☐ Approval by the German TÜV
- ☐ Thermal aprons
- ☐ BOMAG TELEMATIC POWER
- ☐ Outside mirrors
- ☐ ECONOMIZER
- ☐ BOMAP compaction navigation with GPS

BOMAG
Hellerwald
D-56154 Boppard
P.O. Box 5162
Tel. (0)6742 - 1000
Fax (0)6742 - 3090

BOMAG
FAYAT GROUP