TECHNICAL DATA

TANDEM ROLLERS

BW 141 AD-5, BW 151 AD-5, BW 154 AD-5



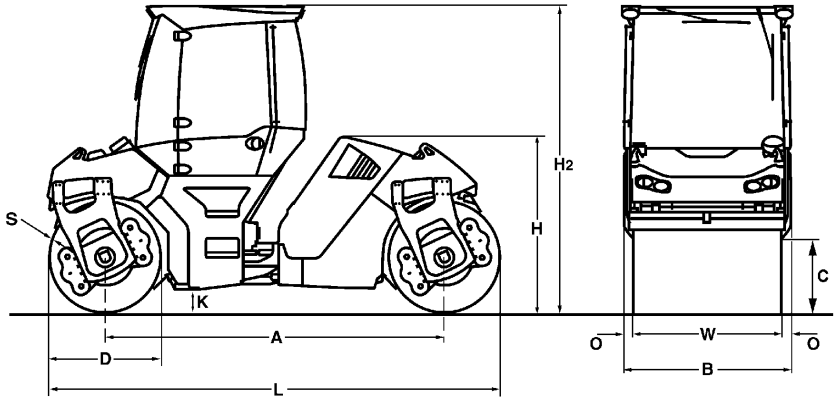

Dimensions in mm

	A	B	C	D	H	H2	K	L	O	S	W
BW 141 AD-5	3300	1664	730	1100	2240	3000	250	4400	82	16	1500
BW 151 AD-5	3300	1844	730	1100	2240	3000	250	4400	82	16	1680
BW 154 AD-5	3300	1844	730	1100	2240	3000	250	4400	82	16	1680

Shipping dimensions in m3	**without ROPS**	**with ROPS**
BW 141 AD-5	16,400	21,965
BW 151 AD-5	18,174	24,341
BW 154 AD-5	18,174	24,341

Machine type	**Compaction output (m3/h) at recommended soil layer thicknesses**		
	Gravel, sand	**Mixed soil**	**Silt, clay**
BW 141 AD-5	140-280	120-250	65-130
BW 151 AD-5	160-320	150-300	75-150

Machine type	**Compaction output (t/h) at different asphalt layer thicknesses**		
	2-4 cm	**6-8 cm**	**10-14 cm**
BW 141 AD-5	35-70	70-150	100-180
BW 151 AD-5	40-80	80-170	120-200
BW 154 AD-5	40-80	80-170	120-200

Technical Data		BOMAG BW 141 AD-5	BOMAG BW 151 AD-5	BOMAG BW 154 AD-5
Weights				
Operating weight CECE w. cab.	kg	6.900	7.600	8.300
Axle load, front CECE	kg	3.560	3.900	4.250
Axle load, rear CECE	kg	3.340	3.700	4.050
Static linear load, front CECE	kg/cm	23,7	23,2	25,3
Static linear load, rear CECE	kg/cm	22,3	22,0	24,1
Grossweight	kg	8.700	9.300	9.900
Dimensions				
Track radius, inner	mm	4.480	4.390	4.390
Drums				
Split drum		no	no	front + rear
Driving Characteristics				
Max. travel speed	km/h	0- 12,0	0- 12,0	0- 12,0
Max. gradeability without/with vibr. ...	%	40/30	40/30	36/30
Drive				
Engine manufacturer		Kubota	Kubota	Kubota
Engine type		V3307 CR-T	V3307 CR-T	V3307 CR-T
Emission stage		Stage V / TIER4f	Stage V / TIER4f	Stage V / TIER4f
Exhaust gas aftertreatment		DOC+DPF	DOC+DPF	DOC+DPF
Cooling		Liquid	Liquid	Liquid
Number of cylinders		4	4	4
Performance ISO 14396	kW	53,8	53,8	53,8
Performance SAE J 1995	hp	72,1	72,1	72,1
Speed	min-1	2.400	2.400	2.400
Electric equipment	V	12	12	12
Brakes				
Service brake		hydrost.	hydrost.	hydrost.
Parking brake		multi disc	multi disc	multi disc
Steering				
Steering system		oscil.artic.	oscil.artic.	oscil.artic.
Exciter system				
Vibrating drum		front + rear	front + rear	front + rear
Autom. vibr. shut off		standard	standard	standard
Frequency	Hz	45/55	45/55	45/55
Amplitude	mm	0,71/0,28	0,68/0,26	0,61/0,30
Centrifugal force	kN	75/45	75/45	89/65
Centrifugal force	t	7,6/4,6	7,6/4,6	9,1/6,6
Capacities				
Fuel	l	125,0	125,0	125,0
Water	l	600,0	600,0	600,0

Technical modifications reserved. Machines may be shown with options.

Standard Equipment

- ☑ 2 amplitudes / 2 frequencies
- ☑ ECOMODE
- ☑ Autom. vibration operation
- ☑ Individual vibration control
- ☑ Driver's seat, slewable
  - laterally slidable with steering wheel
- ☑ Emergency stop button
- ☑ On-board computer
  - engine speed
  - Speedometer
  - Fuel consumption
  - Engine temperature
- ☑ V-belt protection
- ☑ Pressure sprinkling system with 2 pumps
- ☑ Indicator and hazard lights
- ☑ Back-up alarm
- ☑ Battery disconnect switch
- ☑ Compartments for documents and tools

Optional Equipment

- ☐ ROPS cabin with seat belts
  + heating, Ventilation
  + 4 Working head lights
- ☐ ROPS cabin with air conditioning
- ☐ Rotary beacon
- ☐ Crab-walk to both sides (170mm)
- ☐ 2 LED-lights for cabin roof (flatbeam)
- ☐ Edge cutter
- ☐ Special painting
- ☐ Environmentally compliant hydraulic oil
- ☐ Radio/Radio preparation
- ☐ ROPS/FOPS with safety belt
- ☐ Precision spreader BS150 laterally slidable
- ☐ Asphalt temperature display
- ☐ Lighting for drum edge front and rear
- ☐ Seat heating
- ☐ Frequency 70Hz
- ☐ Approval by the German TÜV
- ☐ BOMAG TELEMATIC POWER
- ☐ Outside mirrors
- ☐ ECONOMIZER
- ☐ BOMAP compaction navigation with GPS

BOMAG
Hellerwald
D-56154 Boppard
P.O. Box 5162
Tel. (0)6742 - 1000
Fax (0)6742 - 3090

BOMAG
FAYAT GROUP