TECHNICAL DATA

COMBINATION ROLLER

BW 138 AC-5



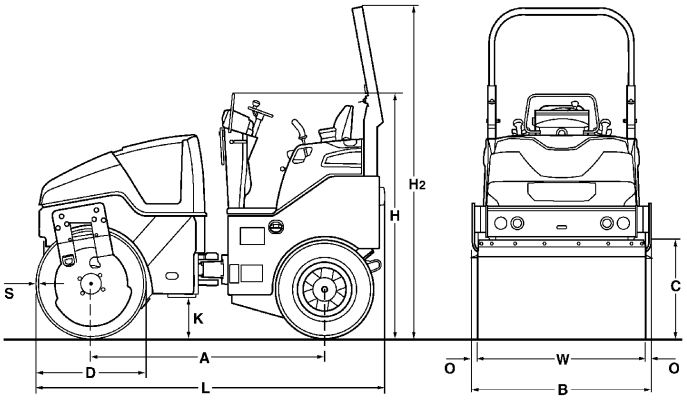

Dimensions in mm

	A	B	C	D	H	H2	K	L	O	S	W
BW 138 AC-5	1900	1468	700	900	1900	2700	340	2840	44	18	1380

Shipping dimensions in m3	**without ROPS**	**with ROPS**
BW 138 AC-5	7,921	11,257

Machine type	**Compaction output (t/h) at different asphalt layer thicknesses**		
	2-4 cm	**6-8 cm**	**10-14 cm**
BW 138 AC-5	30-55	50-90	65-115

Technical Data

BOMAG
BW 138 AC-5

Weights

Operating weight w. ROPS CECE	kg	4.200
Axle load, drum / wheels CECE	kg	2.200/2.000
Wheel load CECE	kg	500
Static linear load, front CECE	kg/cm	15,9
Grossweight	kg	5.500

Dimensions

Working width	mm	1.380
Track radius, inner	mm	2.616

Driving Characteristics

Speed (1)	km/h	5,0
Speed (2)	km/h	10,0
Max. gradeability without/with vibr.	%	40/30

Drive

Engine manufacturer		Kubota
Engine type		V2403
Emission stage		Stage V / TIER4f
Exhaust gas aftertreatment		DPF
Cooling		water
Number of cylinders		4
Performance ISO 14396	kW	34,1
Performance SAE J 1995	hp	45,7
Speed	min-1	2.400
Speed adjustment 1	min-1	2.300
Speed adjustment 2	min-1	2.530
Electric equipment	V	12

Drums and Tyres

Tyre size		10.5/80-16
Number of tyres		4

Brakes

Service brake		hydrost.
Parking brake		hydromec.

Steering

Steering system		oscil.artic.
Steering method		hydrost.
Steering / oscillating angle +/-	grad	32/10
Crab walk	mm	0- 50

Exciter system

Vibrating drum		front
Drive system		hydrost.
Frequency	Hz	50/56
Amplitude	mm	0,50
Centrifugal force	kN	45/57

Capacities

Fuel	l	55,0
Water	l	260,0
Emulsion	l	50,0

Technical modifications reserved. Machines may be shown with options.

Standard Equipment

- ☑ Hydrostatic travel and vibration drive
- ☑ 2 scrapers per drum, spring loaded and tiltable
- ☑ Pressure sprinkler system with interval switch
- ☑ Multi function travel lever
- ☑ Multi-function display incl. operating hour meter
- ☑ Water level
- ☑ Electronic fuel gauge
- ☑ Emergency STOP
- ☑ Individual control, vibration
- ☑ Intelligent Vibration Control (IVC)
- ☑ Integrated storage compartment
- ☑ Sliding seat incl. double travel lever
- ☑ Seat contact switch
- ☑ 12V socket
- ☑ Working lights front and rear
- ☑ Vandalism protection
- ☑ Lockable engine hood made of composite material
- ☑ Lashing eyes, galvanized
- ☑ Single point lifting device
- ☑ Back-up alarm
- ☑ Battery disconnect switch

Optional Equipment

- ☐ *Foldable ROPS incl. seat belt
- ☐ Sun roof, rigid
- ☐ Sun roof, foldable with ROPS
- ☐ Weather protection for sun roof
- ☐ Weather protection cabin
- ☐ Seat heating
- ☐ ECONOMIZER with asphalt temperature display
- ☐ Temperature display
- ☐ BOMAG TELEMATIC
- ☐ Indicator and hazard lights
- ☐ Rotary beacon
- ☐ Optional lighting on ROPS
- ☐ Lighting for drum edge
- ☐ Environmentally compliant hydraulic oil
- ☐ Theft protection
- ☐ Edge cutter
- ☐ Gravel scratter
- ☐ Thermal aprons
- ☐ Hydraulically adjustable crabwalk (50mm)
- ☐ Pointer
- ☐ 2. Amplitude:0,2mm
- ☐ Backup warning buzzer with broadband technology
- ☐ Special painting
- ☐ Tool kit
- ☐ ECOSTOP
- ☐ Outside mirrors
- ☐ Anti-frost intake
- ☐ Tablet holder set
- ☐ JOBLINK measuring technology interface
- ☐ JOBLINK Bluetooth adapter
- ☐ BOMAP GPS antenna holder

* Standard delivery with CE conformity (valid within European Union)#72

BOMAG
Hellerwald
D-56154 Boppard
P.O. Box 5162
Tel. (0)6742 - 1000
Fax (0)6742 - 3090

BOMAG
FAYAT GROUP