TECHNICAL DATA

MOUNTED SPREADER

BS 10, BS 16



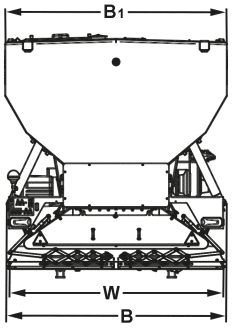

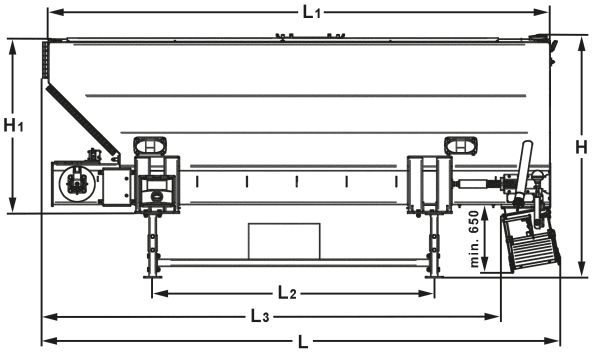

Standard equipment

- ☑ Speed-dependent dosage
- ☑ Radar sensor for speed detection
- ☑ 2 LED working head lights at the rear
- ☑ Compressed air filling from left and right
- ☑ Variable working width

Optional equipment

- ☐ Weighing plate for dosage control
- ☐ Electronic weighing device
- ☐ Camera system at the rear
- ☐ Device for Big Bag or silo filling from above
- ☐ Pneumatic compressor 1,200 l – 8 bar, for cleaning
- ☐ Pneumatic compressor 8,000 l – 2 bar, for filling
- ☐ High-pressure cleaner (BS 16)
- ☐ Water tank for high-pressure cleaner (BS 16)
- ☐ Filter System „Bag filte”
- ☐ Filter System „Cylinder filter” (self-cleaning)
- ☐ Foldable spreading unit with hand pump
- ☐ Foldable spreading unit via on-board hydraulics

Dimensions in mm	B	B1	H	H1	L	L1	L2	L3	W
BS 10	2480	2500	2740	2015	4000	3810	1230	3335	2400
BS 16	2480	2500	2740	2015	5830	5650	3070	5165	2400

Technical data		**BOMAG BS 10**	**BOMAG BS 16**
Type		Mounted spreader	Mounted spreader
Capacity	m^3	10	16
Output*	kg/m^2	5 to 50	5 to 50
Working width	m	1 / 1.5 / 2 / 2.4	1 / 1.5 / 2 / 2.4
Weight (empty)	kg	3,910	4,860
Permissible total weight	kg	13,910	20,860

* Crawling gear required

Requirements for hydraulic pump of carrier vehicle

Pressure	bar	300	300
Quantity min.	l/min	80	80
Recommendation	l/min	100	100
Control		Load-Sensing	Load-Sensing

PRE 910 92 010 201023 Sa02

BOMAG
Hellerwald
D-56154 Boppard
Postfach 5162
D-56149 Boppard
Tel. (0)6742 - 1000
Fax (0)6742 - 3090

BOMAG
FAYAT GROUP