TECHNICAL DATA

TOWED SPREADER

BS 10-2, BS 16



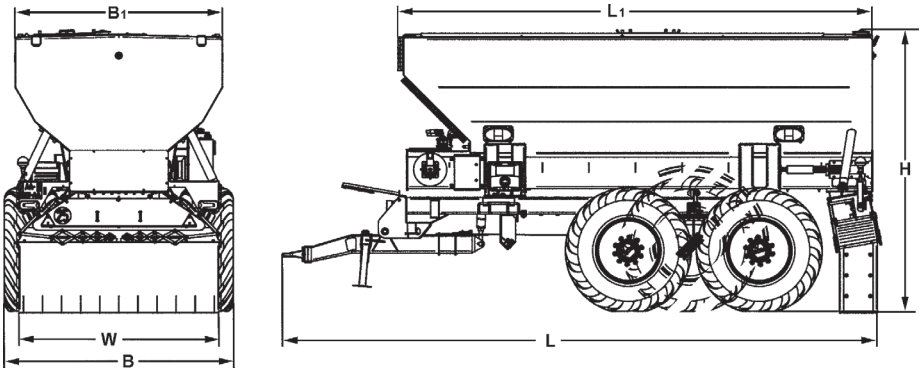

Standard equipment

- ☑ Tyres with Ø 1,450 mm and width 650 mm
- ☑ Spring-loaded bogie axle (oscillating unit)
- ☑ Spring-loaded steering rod
- ☑ Hydraulically-controlled brake
- ☑ LED rear and brake lights
- ☑ Speed-dependent dosage
- ☑ Radar sensor for speed detection
- ☑ 2 LED working head lights at the rear
- ☑ Compressed air filling from left and right
- ☑ Variable working width
- ☑ Towing coupling Rockinger Ø 40 mm
- ☑ CE conformity

Optional equipment

- ☐ Weighing plate for dosage control
- ☐ Electronic weighing device
- ☐ Towing coupling K80 (Scharmüller)
- ☐ Towing coupling Rockinger Ø 50 mm
- ☐ Pneumatic brake system
- ☐ Device for Big Bag or silo filling from above
- ☐ Pneumatic compressor 1,200 l – 8 bar, for cleaning
- ☐ Pneumatic compressor 8,000 l – 2 bar, for filling
- ☐ High-pressure cleaner & Water tank for high-pressure cleaner
- ☐ Filter System „Bag filter"
- ☐ Filter System „Cylinder filter" (self-cleaning)
- ☐ Tank filling valve
- ☐ Hydraulic hand pump parking jack
- ☐ Rear camera

Dimensions in mm	B	B1	H	L	L1	W
BS 10-2	2760	2500	3080	6100	4560	2400
BS 16	2760	2500	3400	7220	5650	2400

Technical data		**BOMAG BS 10-2**	**BOMAG BS 16**
Type		Towed spreader	Towed spreader
Attachment		bottom	bottom
Capacity	m^3	10	16
Output*	kg/m^2	5 to 50	5 to 50
Working width	m	1 / 1.5 / 2 / 2.4	1 / 1.5 / 2 / 2.4
Weight (empty)	kg	5,960	8,800
Permissible total weight	kg	15,960	24,880
Nose weight – tank empty	kg	1,050	1,100
Nose weight – tank full	kg	2,800	3,570
Permissible transport speed	km/h	25	25
Tyre type		650/65 R26.5	650/65 R26.5
Number of axles		1	2
Drive speed of propshaft	min^1	540	540

* Crawling gear required

PRE 910 84 010 260825 Sa

BOMAG
Hellerwald
D-56154 Boppard
Postfach 5162
D-56149 Boppard
Tel. (0)6742 - 1000
Fax (0)6742 - 3090

BOMAG
FAYAT GROUP