PERFORMANCE DATA

PAVER (STAGE V)

BF 800 C-3



MAGMA LIFE

Greatest durability

QUICKCOUPLING

Shorter set-up times

ECOMODE

Exemplary efficiency

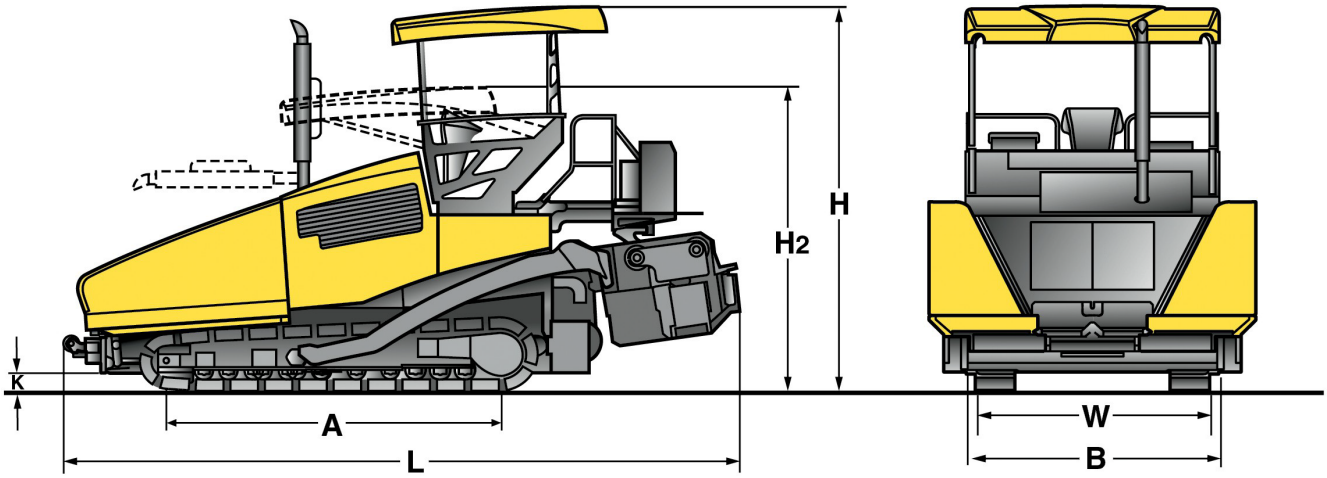

Dimensions in mm

	A	B	H	H_2	L	W
BF 800 C-3 S500	3360	2550	3865	3055	6800	2226
BF 800 C-3 S600	3360	3000	3865	3055	6800	2226



Save up to 17 % fuel – demand-driven hydraulics – with BOMAG ECOMODE.



Full control from the side. The integrated levelling controller and automatic inclination ensure perfect quality.



The new control centre. The intuitive operator interface not only provides all the necessary information, but also supports the operator with assistance functions.



The right position in any situation – the comfortable driver's cab with swivel seat concept.

Technical Data		BOMAG BF 800 C-3
Weight CECE		
With S 500 screed / with S 600 screed	kg	23000 / 23500
Dimensions		
Transport length	mm	6800
Transport width	mm	2550 / 3000
Transport height	mm	3020
Travel characteristics		
Travel speed (1)	km/h	0-4
Working speed (1)	m/min	0-25
Drive		
Engine manufacturer		DEUTZ
Type		TCD 6.1 L06
Exhaut classification		Stage V / TIER 4f
Cooling		liquid
Number of cylinders		6
Rated power ISO 3046	kW	140
Speed	min^{-1}	2000
Crawler assembly		
Crawler track		
-Axle base	mm	3360
-Width	mm	300
Hopper		
Capacity	m^3	7,2
Width (wings open)	mm	3390
Width (wings closed)	mm	2463
Length	mm	2186
Filling height (middle)	mm	560
Scraper belt		
Number		2
Width	mm	400
Speed	min^{1}	64
Individual control		Serie
Reversing operation		Serie
Conveyor auger		
->Number		2
->Auger diameter	mm	400
->Rotary speed	min^{1}	104
->Reversing operation		Serie
Screed		S 500 / S 600
Screed type		S 500 / S 600
Basic width retracted	mm	2550 / 3000
Basic width extended	mm	5000 / 6000
Max. working width	mm	9000 / 10000
min. width with reduction skids	mm	1650 / 2100
Mat thickness	mm	300
Smoothing plate depth	mm	400
Smoothing plate thickness	mm	15
Heating		Electric
Crown	%	-2,5 ... +4,5
Tamper frequency	Hz	0-29
Vibration frequency	Hz	20-58
Basic weight	kg	4400 / 4900
Filling capacities		
Fuel	l	285
Hydraulic oil	l	160

Technical modifications reserved. Machines may be shown with options. The actual machine weight depends on the respective configuration.

Standard Equipment

Operator compartment

- ☑ SIDEVIEW
- ☑ Driver‘s seat: with swivel and side-shift
- ☑ Dashboard protection
- ☑ Hydraulic hinged roof
- ☑ A-PAVE operating concept
- ☑ Intuitive operation through display
- ☑ Electronic machine management

Tractor

- ☑ ECOMODE
- ☑ Separate control of hopper wings
- ☑ Cleaning kit
- ☑ Hydraulic, height adjustable auger
- ☑ Track scraper
- ☑ 2 proportionally controlled and reversible wear-resistant cast augers, screw blades separately replaceable
- ☑ 2 independent and reversible scraper belts, high-wear resistant plates
- ☑ Rubber track pads

Screed

- ☑ L.C.S. Screed relief and traction increase system
- ☑ Screed temperature control
- ☑ MAGMALIFE Aluminium heating plates
- ☑ MAGMALIFE Automatic screed heating
- ☑ Hydraulic screed lock
- ☑ Crown adjustment
- ☑ Side control of auger/scraper belts
- ☑ Electronic side-mounted driver’s stand with display
  - Crown profile and automatic inclination
  - Integrated levelling controller
  - Material calculator

Other

- ☑ Tools
- ☑ 8 LED work lights
- ☑ 30 kVA generator
- ☑ Socket 2 x 230 volt

Optional Equipment

Operator compartment

- ☐ Hydraulic/electric movable SIDEVIEW platform
- ☐ Windscreened platform
- ☐ Lateral Weather protection
- ☐ Comfort seat
- ☐ Seat heating
- ☐ Asphalt steam extraction
- ☐ Advanced operating concept

Tractor

- ☐ LED roof working lights
- ☐ Central lubrication system
- ☐ Optional paint finish
- ☐ Biologically degradable hydraulic oil
- ☐ Hydraulic hopper front flap
- ☐ Dampened push rollers
- ☐ Ultrasonic sensors for conveyor belt control
- ☐ Electric track scraper

Screed

- ☐ Hydraulic sideplates
- ☐ Hydraulic crown adjustment
- ☐ Hinged side plates
- ☐ Heated side plates
  S 500 + S 600 extensions:
  250 mm, 750 mm, 1250 mm
- ☐ Dosing plates
- ☐ Reduction shoes
- ☐ Edge shaper 45°/60°

Levelling systems

- ☐ Height and cross-slope sensing by means of ultrasonic or mechanical sensors

Other

- ☐ Fleet management BOMAG TELEMATIC
- ☐ Ballon light
- ☐ Joblink data interface
- ☐ Truck Dock, stop light system for communication with the truck
- ☐ Camera system
- ☐ Smart sensors for screed width, tow point and crown

PRE 893 39 010 110825 Sa05

BOMAG
Hellerwald
D-56154 Boppard
Postfach 5162
D-56149 Boppard
Tel. (0)6742 - 1000
Fax (0)6742 - 3090

BOMAG
FAYAT GROUP