PERFORMANCE DATA

PAVER (STAGE V)

BF 350 P-5



MAGMA LIFE

Greatest durability

QUICKCOUPLING

Shorter set-up times

ECOMODE

Exemplary efficiency

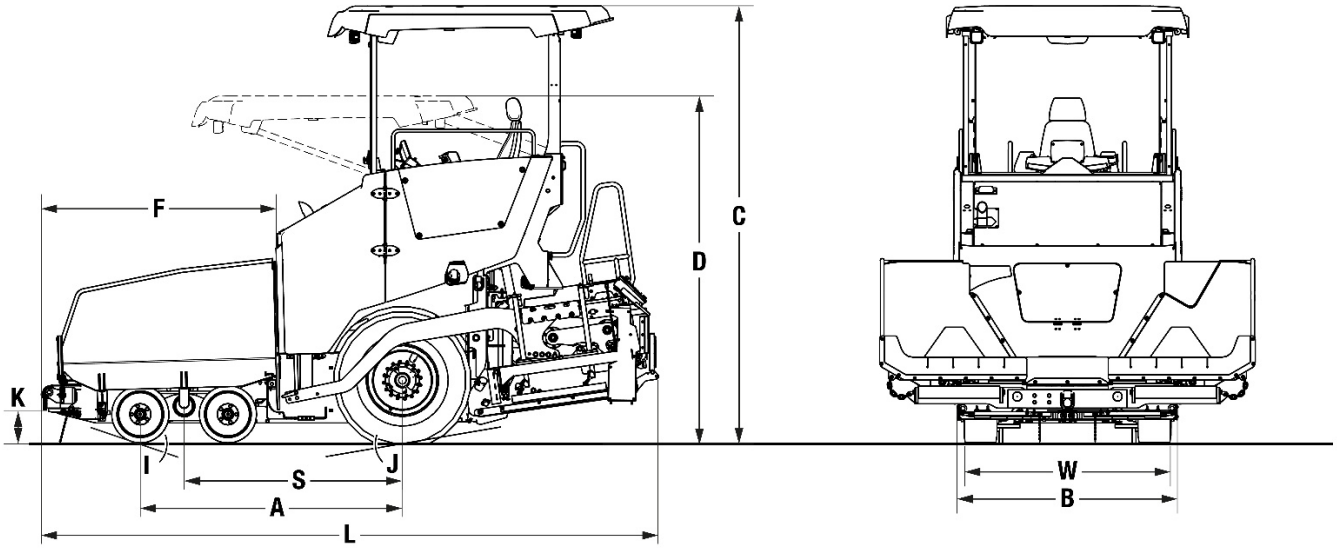

Dimensions in mm

	A	B	C	D	F	I	J	K	L	S	W
BF 350 P-5	2154	1922	3596	2998	1940	14°	13°	260	5048	1794	1700



myCockpit - Personalize your operating concept



Screed side panel with large full graphic display - direct access to all major functions



Enhanced visibility to the side thanks to BOMAG SIDEVIEW.



Heats up nearly 60 % quicker – unique MAGMALIFE heating system.

Technical Data		BOMAG BF 350 P- 5
Weight CECE		
With S340-5 V screed / S340-5 TV screed	kg	9550 / 9700
Dimensions		
Transport length	mm	5050
Transport width	mm	1925
Transport height	mm	3000
Inner turning radius	mm	2400
Outer turning radius	mm	4050
Travel characteristics		
Travel speed	km/h	0-20
Working speed	m/min	0-30
Drive		
Engine manufacturer		Deutz
Type		TCD 2.9 L04
Emission stage		Stage V
Cooling		liquid
Number of cylinders		4
Rated power	kW / HP	75 / 100
Rotary Speed	min^{-1}	2200
Undercarriage		
Rear tyres / Number		2
Type		13 R 22.5
Front tyres / Number		4
Diameter	mm	470
Width	mm	270
Hopper		
Capacity	m^3	4,8
Width (wings open)	mm	3080
Width (wings closed)	mm	1730
Length	mm	1760
Filling height (middle)	mm	538
Conveyor		
Number		2
Rotary speed	m/min^{-1}	55
Individual control		Standard
Reversing operation		Standard
Auger		
Number	mm	2
Auger diameter	mm	280
Rotary speed	m/min^{-1}	100
Reversing operation		Standard
Screed		S 340-5
Basic width retracted	mm	1700
Basic width extended	mm	3400
Min. width with reduction skids	mm	700
Mat thickness	mm	250
Screed plate depth	mm	330
Screed plate thickness	mm	10
Heating		electric
Crown	%	-2,5 ... +4,5
Tmaper frequency	Hz	N.A. /10-30
Vibration frequency	Hz	15-50 /15-50
Basic weight	kg	1550 / 1650
Max. working width	mm	4400
Filling capacities		
Fuel	l	110
Hydraulic oil	l	74
AdBlue	l	20

Technical modifications reserved. Machines may be shown with options. The actual machine weight depends on the respective configuration.

Standard Equipment

Operator compartment

- ☑ Comfort seat
- ☑ Seat heating
- ☑ SIDEVIEW
- ☑ Driver‘s seat: with swivel and side-shift
- ☑ Dashboard protection
- ☑ Hydraulic hinged roof
- ☑ A-PAVE operating concept
- ☑ Intuitive machine control through touch display or encoder
- ☑ Electronic machine management

Tractor

- ☑ ECOMODE
- ☑ Separate control of hopper wings
- ☑ 2 proportionally controlled and reversible wear-resistant cast augers; screw blades separately replaceable
- ☑ 2 independent and reversible scraper belts; high-wear resistant plates
- ☑ 2 x 6 wheel drive
- ☑ Front window

Screed

- ☑ L.C.S. Screed relief and traction increase system
- ☑ Screed temperature control
- ☑ Mechanical screed lock
- ☑ Crown adjustment
- ☑ Side control of auger/scraper belts
- ☑ Electronic side-mounted screed controls with touch display and integrated levelling controller

Other

- ☑ Tools
- ☑ LED work lights
- ☑ 14 kVA generator
- ☑ Socket 230 volt

Optional Equipment

Operator compartment

- ☐ Lateral weather protection for the platform
- ☐ Asphalt steam extraction

Tractor

- ☐ Central lubrication system
- ☐ Optional paint finish
- ☐ Biologically degradable hydraulic oil
- ☐ 4 x 6 / 6 x 6 all-wheel drive
- ☐ Hydraulic hopper front flap
- ☐ Dampened push rollers
- ☐ Light assist with coming&leaving home
- ☐ Hydr. auger height adjustment

Screed

- ☐ Hydraulic crown adjustment
- ☐ Heated side plates
- ☐ MAGMALIFE aluminium heating plates
- ☐ S 340-5 extensions:
  300 mm
  500 mm
- ☐ Reduction shoes

Levelling systems

- ☐ Height and cross-slope sensing by means of ultrasonic

Other

- ☐ Fleetmanagement BOMAG TELEMATIC
- ☐ Moon-light balloon
- ☐ Additional LED work lights
- ☐ Measurement sensors for tractor and screed

BOMAG
Hellerwald
D-56154 Boppard
Postfach 5162
D-56149 Boppard
Tel. (0)6742 - 1000
Fax (0)6742 - 3090

BOMAG
FAYAT GROUP