TECHNISCHE DATEN

PAVER

BF 200 C-2



MAGMA LIFE

Greatest durability

QUICKCOUPLING

Shorter set-up times

ECOMODE

Exemplary efficiency

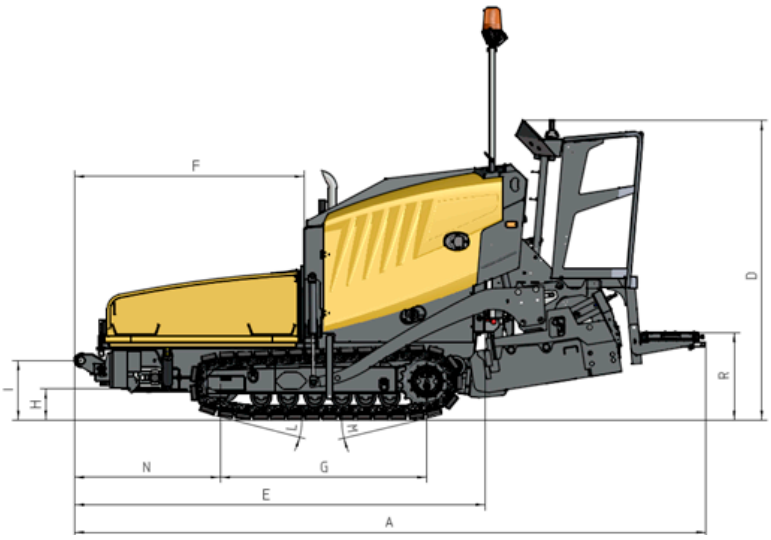

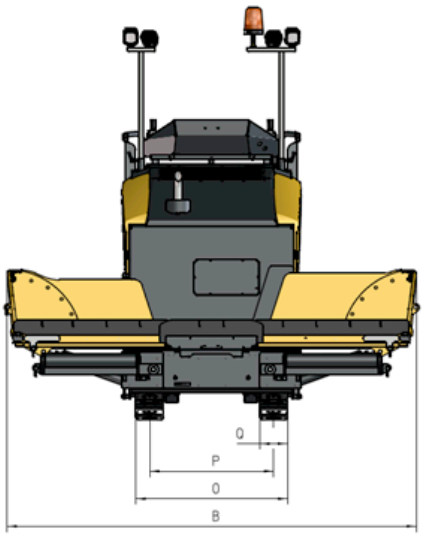

Dimensions in mm

	A	B	D	E	F	G	H	I	L	M	N	O	P	Q	R
BF 200 C-2	4600	2980	1995-2195	2986	1671	1500	228	433	14°	14°	1061	1100	900	200	458-658



Two level platform concept - best view without compromises.



Save up to 20 % fuel – demand-driven hydraulics – with BOMAG ECOMODE.



Compact and agile - unique receipe for full flexibility.



Heats up nearly 60 % quicker – unique MAGMALIFE heating system.

Technical Data		BOMAG BF 200 C-2
Weights		
Operating weight CECE	kg	6000
Dimensions		
Transport length	mm	4270
Transport width	mm	1300
Transport height	mm	1995
Travel characteristics		
Travel speed	km/h	0-4,5 variable
Working speed	m/min	0-29 variable
Drive		
Engine manufacturer		Kubota
Type		V3307-CR
Emission stage		Stage V / TIER4f
Cooling		liquid
Number of cylinders /Displacement	cm^3	4 / 3330
Performance	kW / hp	53,8 / 72,1
Speed	min^{-1}	2250
Performance ECOMODE (1.570 min-1)	kW / hp	43,0 / 57,6
Performance ECOMODE (1.800 min-1)	kW / hp	47,9 / 64,2
Hopper		
Capacity	m^3	2,0
Width (wings open)	mm	2980
Width (wings close)	mm	1300
Length	mm	1400
Filling height (middle)	mm	433
Conveyor		
Number		1
Rotary speed	m/min	33
Individual control		no
Reversing operation		Standard
Auger		
Number		2
Auger diameter	mm	300
Rotary speed	min^{-1}	87
Reversing operation		Standard
Screed		
Basic width retracted	mm	1100
Basic width extended	mm	2000
Min. width with reduction skids	mm	400
Mat thickness	mm	200
Screed plate depth	mm	250
Screed plate thickness	mm	10
Heating		electric
Crown	%	-2,0 ... +4,0
Tamper frequency	Hz	max. 30
Vibration frequency	Hz	max. 60
Basic weight (TV/V)	kg	790 / 700
Max. working width	mm	3400
Filling capacities		
Fuel	l	80
Hydraulic oil	l	60

Technical modifications reserved. Machines may be shown with options.

Standard Equipment

Operator compartment
- ☑ Dashboard protection
- ☑ Digital display for machine management
- ☑ SIDEVIEW with a double steering and travel joystick

Tractor
- ☑ ECOMODE
- ☑ Push rollers
- ☑ Separate control of hopper wings
- ☑ 2 proportionally controlled and reversible wear-resistant cast augers; screw blades separately replaceable
- ☑ Rubber track pads

Screed
- ☑ Screed temperature control
- ☑ Mechanical screed lock
- ☑ Crown adjustment
- ☑ Side control of auger/scraper belts

Other
- ☑ Tools
- ☑ Three phase Generator

Hopper
- ☑ Viewing tunnel

Optional Equipment

Operator compartment
- ☐ Two plattform concept

Tractor
- ☐ Integrated cleaning kit
- ☐ Asphalt steam extraction
- ☐ Optional paint finish
- ☐ Biologically degradable hydraulic oil
- ☐ Hydraulic, height adjustable auger
- ☐ Track scraper
- ☐ Direction rod
- ☐ Ultrasonic sensors for auger control

Screed
- ☐ Hydraulic crown adjustment
- ☐ S 200 extensions: 350 mm
- ☐ S 200 extensions: 600 mm
- ☐ MAGMALIFE Aluminium heating plates
- ☐ Heated side plates
- ☐ Reduction shoes

Levelling systems
- ☐ L.C.S. Screed relief and traction increase system
- ☐ Height and cross-slope sensing by means of ultrasonic or mechanical sensors

Other
- ☐ Fleetmanagement BOMAG TELEMATIC
- ☐ LED working lights
- ☐ Sunroof
- ☐ Joblink data interface

Hopper
- ☐ Hydraulic side flap

PRE 890 07 010 131026 Sa05

BOMAG
Hellerwald
D-56154 Boppard
Postfach 5162
D-56149 Boppard
Tel. (0)6742 - 1000
Fax (0)6742 - 3090

BOMAG
FAYAT GROUP