BOMAG
FAYAT GROUP

TECHNICAL DATA

SOIL COMPACTOR

BC 773 EB-5



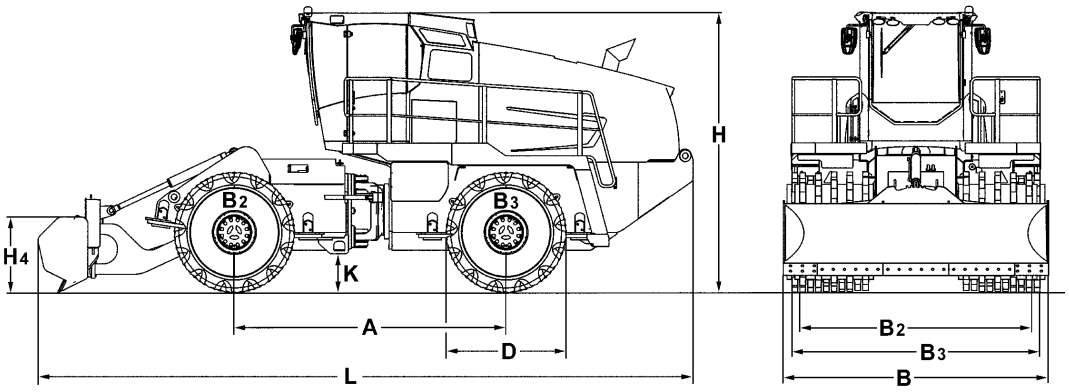

Dimensions in mm

	A	B	B2	B3	D	H2	H4	K	L
BC 773 EB-5	3890	3800	3692	3467	1725	3975	1050	565	9490

Shipping dimensions in m3

BC 773 EB-5	143,346

Technical Data

		BC 773 EB-5
Weights		
Grossweight	kg	37.600
Operating weight CECE	kg	37.000
Axle load, front / rear CECE	kg	18.000/19.000
Driving Characteristics		
Speed (1), forward	km/h	12,0
Speed (1), reverse	km/h	12,0
Max. gradeability (dep. on soil con.)	%	100
Max. pushing force	kN	409
Drive		
Engine manufacturer		Cummins
Type		X15-C450 S5
Emission stage		Stage V / TIER4
Exhaust gas aftertreatment		DOC+DPF+SCR+ASC
Cooling		Liquid
Number of cylinders		6
Performance ISO 9249	kW	336,0
Performance SAE J 1349	hp	450,0
Speed	min-1	2.100
Travel system		hydrost.
Operating voltage	V	24
Compaction Wheels		
Width, front / rear	mm	1.125/1.125
Outer diameter (front)	mm	1.725
Outer diameter (rear)	mm	1.725
Number of teeth/cutters, front		65
Number of teeth/cutters, rear		65
Compaction coverage per side	mm	1.350
Brakes		
Service brake		hydrostatisch
Parking brake		hydromechanisch
Steering		
Steering system		oscil.artic.
Steering method		hydraulic
Steering / oscillating angle +/-	grad	38/15
Track radius, inner	mm	3.756
Dozer Blade		
Height adjustment over ground level	mm	1.200
Height adjustment below ground level	mm	135
Capacities		
Fuel	l	650,0
Engine oil	l	47,0
Hydraulic oil	l	520,0
AdBlue (DEF) ®	l	40,0

Technical modifications reserved. Machines may be shown with options.

Standard Equipment

- ☑ Electronic engine management
- ☑ Electronic monitoring module with engine shut-down
- ☑ Engine air intake at a height of 3,30 m
- ☑ Dry air filter
- ☑ Cold starting system
- ☑ Multi fuel filter system
- ☑ Fuel bleeding pump
- ☑ Hydraulic all-wheel drive (Quad pump drive)
- ☑ Wear control in hydraulic circuit
- ☑ Hydraulically operated articulated steering system
- ☑ Oscillating articulated joint between front and rear frames
- ☑ Automatic central lubrication system (Bucket system, manual)
- ☑ Adjustable scrapers in front of and behind each wheel
- ☑ All drive components well protected by the closed frame pan
- ☑ Wire deflector and drive protection on inner side of wheels
- ☑ ROPS/FOPS
- ☑ Noise insulated cab
- ☑ Vibration insulated cab suspension
- ☑ Cab ventilation with overpressure
- ☑ Activated charcoal filter for odour restriction
- ☑ Automatic heating - air conditioning
- ☑ Tinted safety glass panes
- ☑ Sun shades
- ☑ Hinged window, left
- ☑ Windscreen wiper/washer, front
- ☑ Interval switch for windscreen wipers
- ☑ Outer rear-view mirror, electrically adjustable
- ☑ Heated outside mirror
- ☑ Heatable rear windscreens
- ☑ Air suspended seat
- ☑ Seat belt
- ☑ Seat heating
- ☑ Head rest
- ☑ Control units for bucket/dozer blade and travel direction control integrated in the driver's seat
- ☑ Adjustable joystick steering
- ☑ Display instruments
- ☑ Radio
- ☑ 24 V electrics
- ☑ Generator 140 A
- ☑ Battery disconnecting switch
- ☑ LED Working lights, 4 front/4 rear/2 lateral
- ☑ Rotary beacon
- ☑ Audible backup alarm
- ☑ Warning horn
- ☑ Access steps right / left
- ☑ Towing eyes front / rear
- ☑ Hydr. driven, reversible and speed controlled radiator fan
- ☑ Rearview camera

Optional Equipment

- ☐ Compaction wheels, teeth with replaceable caps
- ☐ Premium compaction wheels with highly wear resistant teeth
- ☐ Soil compactor dozer blade (3800mm)
- ☐ Dozer blade with tilting mechanism
- ☐ Fire extinguisher
- ☐ Special painting
- ☐ Environmentally compliant engine oil
- ☐ Protective ventilation system (Pre-installation)
- ☐ Cold start device 115V
- ☐ Cold start device 230V
- ☐ TELEMATIC POWER

BOMAG
Hellerwald
D-56154 Boppard
P.O. Box 5162
Tel. (0)6742 - 1000
Fax (0)6742 - 3090

BOMAG
FAYAT GROUP