TECHNICAL DATA

REFUSE COMPACTOR

BC 673 RB-5, BC 773 RB-5



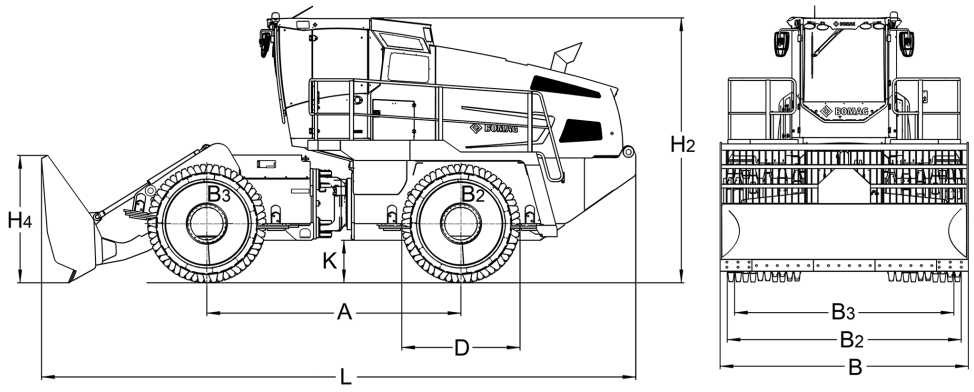

Dimensions in mm

	A	B	B2	B3	D	H2	H4	K	L
BC 673 RB-5	3890	3800	3692	3467	1810	4060	1950	650	9110
BC 773 RB-5	3890	3800	3692	3467	1810	4060	1950	650	9110

Shipping dimensions in m3

BC 673 RB-5	140,549
BC 773 RB-5	140,549

Technical Data		BOMAG BC 673 RB-5	BOMAG BC 773 RB-5
Weights			
Grossweight	kg	34.300	37.900
Operating weight CECE	kg	33.700	37.300
Axle load, front / rear CECE	kg	16.200/17.500	18.100/19.200
Driving Characteristics			
Speed (1), forward	km/h	0- 12,0	0- 12,0
Speed (1), reverse	km/h	0- 12,0	0- 12,0
Max. gradeability (dep. on soil con.)	%	100	100
Max. pushing force	kN	346	394
Drive			
Engine manufacturer		Merc.-Benz	Merc.-Benz
Type		OM 471 LA	OM 471 LA
Emission stage		Stage V / TIER4	Stage V / TIER4
Exhaust gas aftertreatment		DOC+DPF+SCR	DOC+DPF+SCR
Cooling		Liquid	Liquid
Number of cylinders		6	6
Performance ECE R 120	kW	340,0	340,0
Performance SAE J 1349	hp	456,0	456,0
Speed	min-1	1.700	1.700
Travel system		hydrost.	hydrost.
Operating voltage	V	24	24
Compaction Wheels			
Width, front / rear	mm	1.125/1.125	1.125/1.125
Outer diameter (front)	mm	1.810	1.810
Outer diameter (rear)	mm	1.810	1.810
Number of teeth/cutters, front		55	55
Number of teeth/cutters, rear		55	55
Compaction coverage per side	mm	1.238	1.238
Brakes			
Service brake		hydrost.	hydrost.
Parking brake		hydromec.	hydromec.
Steering			
Steering system		oscil.artic.	oscil.artic.
Steering method		hydraulic	hydraulic
Steering / oscillating angle +/-	grad	40/15	40/15
Track radius, inner	mm	3.756	3.756
Dozer Blade			
Height adjustment over ground level	mm	1.200	1.200
Height adjustment below ground level	mm	50	50
Dozer blade capacity acc. to SAE J 1265	m3	11,6	11,6
Capacities			
Fuel	l	650,0	650,0
Engine oil	l	39,0	39,0
Hydraulic oil	l	350,0	350,0
AdBlue (DEF) ®	l	40,0	40,0

Technical modifications reserved. Machines may be shown with options.

Standard Equipment

- ☑ Electronic engine management
- ☑ Electronic monitoring module with engine shut-down
- ☑ Engine air intake at a height of 3,30 m
- ☑ Dry air filter
- ☑ Cold starting system
- ☑ Multi fuel filter system
- ☑ Fuel bleeding pump
- ☑ Hydraulic all-wheel drive (Quad pump drive)
- ☑ Wear control in hydraulic circuit
- ☑ Hydraulically operated articulated steering system
- ☑ Oscillating articulated joint between front and rear frames
- ☑ Automatic central lubrication system (Bucket system, manual)
- ☑ Adjustable scrapers in front of and behind each wheel
- ☑ All drive components well protected by the closed frame pan
- ☑ Wire deflector and drive protection on inner side of wheels
- ☑ ROPS/FOPS
- ☑ Noise insulated cab
- ☑ Vibration insulated cab suspension
- ☑ Cab ventilation with overpressure
- ☑ Activated charcoal filter for odour restriction
- ☑ Automatic heating - air conditioning
- ☑ Tinted safety glass panes
- ☑ Sun shades
- ☑ Hinged window, left
- ☑ Windscreen wiper/washer, front
- ☑ Interval switch for windscreen wipers
- ☑ Outer rear-view mirror, electrically adjustable
- ☑ Heated outside mirror
- ☑ Heatable rear windscreens
- ☑ Air suspended seat
- ☑ Seat belt
- ☑ Seat heating
- ☑ Head rest
- ☑ Control units for bucket/dozer blade and travel direction control integrated in the driver's seat
- ☑ Adjustable joystick steering
- ☑ Display instruments
- ☑ CD-Radio
- ☑ 24 V electrics
- ☑ Generator 150 A
- ☑ Battery disconnecting switch
- ☑ LED Working lights, 4 front/4 rear/2 lateral
- ☑ Rotary beacon
- ☑ Audible backup alarm
- ☑ Warning horn
- ☑ Access steps right / left
- ☑ Towing eyes front / rear
- ☑ Hydr. driven, reversible and speed controlled radiator fan
- ☑ Rearview camera

Optional Equipment

- ☐ Polygonal compaction wheels, teeth with replaceable caps
- ☐ Premium compaction wheels with highly wear resistant teeth
- ☐ Blade 3800mm
- ☐ Semi-U-Blade 3750mm
- ☐ Semi-U-Blade 4480mm
- ☐ PS3 Bucket 3800mm
- ☐ Blade 4350mm
- ☐ Pre start cabin heating
- ☐ Fire extinguisher
- ☐ Special painting
- ☐ Environmentally compliant hydraulic oil
- ☐ Protective ventilation system (Pre-installation)
- ☐ Lockable hood lock (anti-theft protection)
- ☐ Tool kit
- ☐ Tarpomatic (Pre-installation)
- ☐ Tachograph
- ☐ Cold start device 115V
- ☐ Cold start device 230V
- ☐ TELEMATIC POWER

BOMAG
Hellerwald
D-56154 Boppard
P.O. Box 5162
Tel. (0)6742 - 1000
Fax (0)6742 - 3090

BOMAG
FAYAT GROUP