TECHNICAL DATA

REFUSE COMPACTOR

BC 473 RB-5, BC 573 RB-5



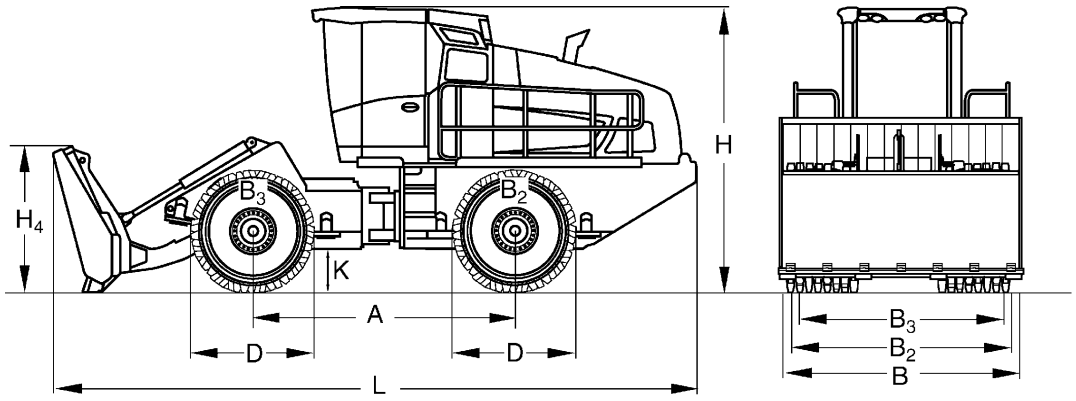

Dimensions in mm

	A	B	B2	B3	D	H	H4	K	L
BC 473 RB-5	3500	3600	3560	3335	1660	3820	1950	600	8610
BC 573 RB-5	3500	3600	3560	3335	1660	3820	1950	600	8610

Shipping dimensions in m3

BC 473 RB-5	118,405
BC 573 RB-5	118,405

Technical Data		BOMAG BC 473 RB-5	BOMAG BC 573 RB-5
Weights			
Grossweight	kg	26.900	29.200
Operating weigh	kg	26.100	28.400
Axle load, front	kg	12.750	13.900
Axle load, rear	kg	13.350	14.500
Driving Characteristics			
Driving speed forward	km/h	0- 12,0	0- 12,0
Driving speed backwards	km/h	0- 12,0	0- 12,0
Max. gradeability (dep. on soil con.)	%	100	100
Max. pushing force	kN	286	305
Drive			
Engine manufacturer		Cummins	Cummins
Engine type		L9	L9
Emission stage		Stage V / TIER4f	Stage V / TIER4f
Exhaust gas aftertreatment		SCR+DOC+DPF+ASC	SCR+DOC+DPF+ASC
Cooling		Liquid	Liquid
Number of cylinders		6	6
Performance ECE R 120	kW	224,0	224,0
Performance SAE J 1349	hp	300,0	300,0
Speed	min-1	2.100	2.100
Travel system		hydrost.	hydrost.
Operating voltage	V	24	24
Compaction Wheels			
Width, front	mm	1.125	1.125
Width, rear	mm	1.125	1.125
Outer diameter (front)	mm	1.660	1.660
Outer diameter (rear)	mm	1.660	1.660
Number of teeth/cutters, front		50	50
Number of teeth/cutters, rear		50	50
Compaction coverage per side	mm	1.238	1.238
Brakes			
Service brake		hydrost.	hydrost.
Parking brake		hydromec.	hydromec.
Steering			
Steering system		oscil.artic.	oscil.artic.
Steering method		hydraulic	hydraulic
Steering angle +/-	grad	35	35
Oscillating angle +/-	grad	15	15
Track radius, inner	mm	3.762	3.762
Dozer Blade			
Height adjustment over ground level	mm	1.200	1.200
Height adjustment below ground level	mm	120	120
Dozer blade capacity acc. to SAE J 1265	m3	11,0	11,0
Capacities			
Fuel	l	375,0	375,0
Hydraulic oil	l	260,0	260,0
AdBlue (DEF)®	l	40,0	40,0

Technical modifications reserved. Machines may be shown with options.

Standard Equipment

- ☑ Electronic engine management
- ☑ Electronic monitoring module with engine shut-down
- ☑ Dry air filter
- ☑ Multi fuel filter system
- ☑ Fuel bleeding pump
- ☑ Four wheel drives, hydraulic differential lock in the front and rear (Twin pump drive – BC 473 RB-5)
- ☑ Four wheel drives with 4 pumps (Quad pump drive – BC 573 RB-5)
- ☑ Wear control in hydraulic circuit
- ☑ Oscillating articulated joint between front and rear frames
- ☑ Adjustable scrapers in front of and behind each wheel
- ☑ All drive components well protected by the closed frame pan
- ☑ Wire deflector and drive protection on inner side of wheels
- ☑ ROPS/FOPS
- ☑ Noise insulated cab with heating – air conditioning
- ☑ Vibration insulated cab suspension
- ☑ Tinted safety glass cabin windows
- ☑ Sun shades
- ☑ Hinged window left
- ☑ Windscreen wiper / washer front
- ☑ Electrically adjustable and heated exterior mirrors
- ☑ Activated carbon filter
- ☑ High air intake
- ☑ Air suspended seat
- ☑ Central lubrication system
- ☑ Joystick steering
- ☑ 7" Touch Display
- ☑ Lockable cabin/engine hood
- ☑ 24 V electrics
- ☑ Generator 150 A
- ☑ Battery disconnecting switch
- ☑ LED Working head lights, 4 front / 2 rear
- ☑ Audible backup alarm
- ☑ Warning horn
- ☑ Access steps right / left
- ☑ Towing eyes front / rear
- ☑ Heated rear screens
- ☑ Reversible fan
- ☑ Working platform
- ☑ Rear-view camera incl. 7" display
- ☑ Climatronic
- ☑ Radio
- ☑ Rotary beacon (2x)
- ☑ Fan guard for radiator fan

Optional Equipment

- ☐ Polygonal compaction wheels, teeth with replaceable caps
- ☐ Premium compaction wheels with highly wear resistant teeth
- ☐ Fire extinguisher
- ☐ Special painting
- ☐ Protective ventilation system (Pre-installation)
- ☐ Tool kit
- ☐ Protective grille for cabin and hood
- ☐ Blade 3600mm
- ☐ Semi-U-Blade 3590mm
- ☐ Cold start device 115V
- ☐ Cold start device 230V
- ☐ Fleetmanagement BOMAG TELEMATIC
- ☐ Cyclone Pre-filter
- ☐ Rear-view camera incl. 10" display
- ☐ Environmentally compliant hydraulic oil
- ☐ Transport wheels
- ☐ Protective film for cabin roof
- ☐ Side-mounted LED work lights (2x)

BOMAG
Hellerwald
D-56154 Boppard
P.O. Box 5162
Tel. (0)6742 - 1000
Fax (0)6742 - 3090

BOMAG
FAYAT GROUP